Table of Contents

# Snow Blowers

## SB1051, SB1064, SB1574, & SB2584 with S/N 881641+

37078

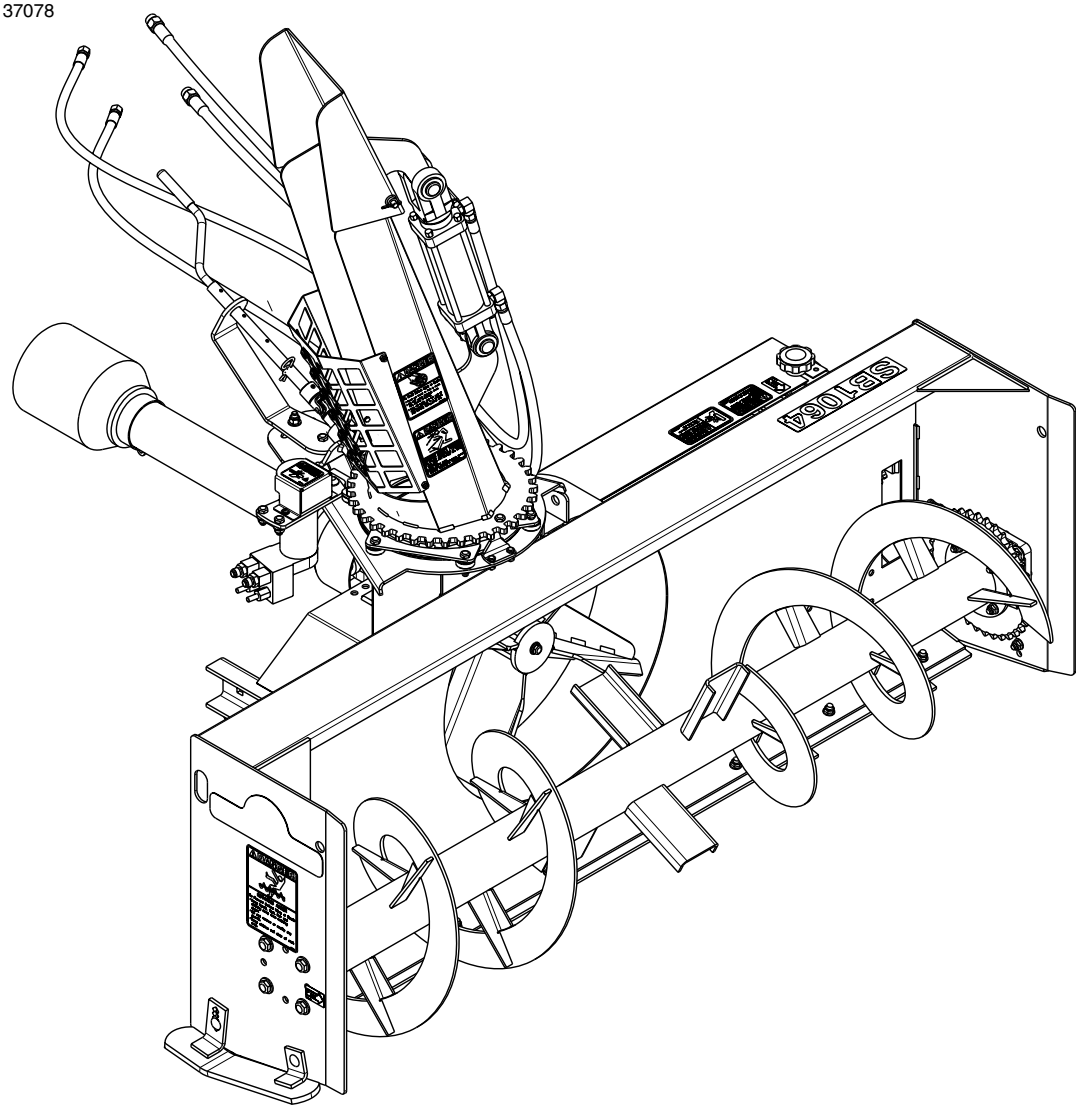

**SB10 Series Shown with Optional Hydraulic Chute Rotor, Hydraulic Deflector, & Skid Shoes**

## *370-430M Operator's Manual*

Read the Operator's Manual entirely. When you see this symbol, the subsequent instructions and warnings are serious - follow without exception. Your life and the lives of others depend on it!

***Cover photo may show optional equipment not supplied with standard unit.***

***For an Operator's Manual and Decal Kit in French Language, please see your Land Pride dealer.***

Printed 4/18/24

## Machine Identification

Record your machine details in the log below. If you replace this manual, be sure to transfer this information to the new manual.

If you, or the dealer, have added Options not originally ordered with the machine, or removed Options that were originally ordered, the weights and measurements are no longer accurate for your machine. Update the record by adding the machine weight and measurements provided in the Specifications & Capacities Section of this manual with the Option(s) weight and measurements.

| | |
|---|---|
| **Model Number** | |
| **Serial Number** | |
| **Machine Height** | |
| **Machine Length** | |
| **Machine Width** | |
| **Machine Weight** | |
| **Delivery Date** | |
| **First Operation** | |
| **Accessories** | |

### Dealer Contact Information

**Name:** _____

**Street:** _____

**City/State:** _____

**Telephone:** _____

**Email:** _____

**California Proposition 65**

⚠ **WARNING**: Cancer and reproductive harm - www.P65Warnings.ca.gov

**Important Safety Information . . . . . 1**
Safety at All Times . . . . . 1
Look for the Safety Alert Symbol . . . . . 1
Safety Labels . . . . . 6
**Introduction . . . . . 11**
Application . . . . . 11
Using This Manual . . . . . 11
Owner Assistance . . . . . 11
Serial Number . . . . . 11
**Section 1: Standard Assembly & Set-up . . . 12**
Tractor Requirements . . . . . 12
Torque Requirements . . . . . 12
Dealer Set-up Instructions . . . . . 12
Loading & Unloading . . . . . 12
SB10 Chute Assembly . . . . . 13
SB15 & 25 Chute Assembly . . . . . 13
**Section 2: Optional Assembly & Set-up . . . . 14**
Manual Chute Rotation . . . . . 14
Sprocket Adjustment . . . . . 14
Hydraulic Chute Rotation . . . . . 15
Electric Chute Rotation . . . . . 15
Hydraulic Deflector Assembly . . . . . 16
Electric Deflector Assembly . . . . . 16
Manual Deflector Assembly . . . . . 17
Skid Shoes, Outer . . . . . 17
Skid Shoes, Inner . . . . . 17
Wear Bar, Lower . . . . . 18
Wear Bars, Outer . . . . . 18
3-Point Hitch Assembly . . . . . 19
Driveline Shield . . . . . 19
Lower 3-Point Telescoping Arms . . . . . 19
A-Frame Hitch . . . . . 19
Manual Storage Container . . . . . 20
Driveline Assembly . . . . . 20
Extend/Retract 3-Point Hitch Frame . . . . . 21
**Section 3: Tractor Hook-up & Unhook . . . . . 22**
Three Point Hook-up . . . . . 22
Driveline Hook-Up . . . . . 22
Hydraulic Hook-up . . . . . 23
Hydraulic Motor For Chute Rotation . . . . . 23
Hydraulic Cylinder For Deflector Adjustment . . . 23
Electrical Hook-up . . . . . 24
Adjust Chute Rotation Handle . . . . . 24
Level Snow Blower . . . . . 25
Check 3-Point Driveline Interference . . . . . 25
Check Driveline Collapsible Length . . . . . 26
Driveline Maximum Allowable Length . . . . . 27
Unhook Snow Blower . . . . . 28
**Section 4: Adjustments . . . . . 29**
Hitch Pin Locations . . . . . 29
Standard 3-Point & Quick Hitch Hook-up . . . . . 29
Special 3-Point Hook-up . . . . . 29
Special Quick Hitch Hook-up . . . . . 29
Chute Rotation . . . . . 30
Manual Rotation . . . . . 30
Electric Motor Rotation . . . . . 30
Hydraulic Motor Rotation . . . . . 30
Deflector . . . . . 30
Manual Adjusting . . . . . 30
Electric Actuator Adjusting . . . . . 30
Hydraulic Cylinder Adjusting . . . . . 30
Inner Skid Shoes . . . . . 31
Outer Skid Shoes . . . . . 31
Outer Wear Bars . . . . . 32
Drive Chain Take-up . . . . . 32
**Section 5: Operating Instructions . . . . . 33**
Operating Checklist . . . . . 33
Safety Information . . . . . 33
Inspection Procedures . . . . . 35
Transporting . . . . . 35
Tractor Shutdown Procedure . . . . . 35
General Operation Instructions . . . . . 36
**Section 6: Maintenance & Lubrication . . . . . 38**
General Maintenance Information . . . . . 38
Hydraulic System . . . . . 38
Auger & Impeller Inspection . . . . . 38
Chute Bearings . . . . . 39
Shear Bolt Protection . . . . . 39
Drive Shaft Shear Bolt . . . . . 39
3-Point Driveline Shear Bolt . . . . . 39
Drive Chain . . . . . 40
Inner Skid Shoes (Optional) . . . . . 40
Outer Skid Shoes (Optional) . . . . . 41
Outer Wear Bars (Optional) . . . . . 41
Lower Wear Bar (Optional) . . . . . 42
Long-Term Storage . . . . . 42
Ordering Replacement Parts . . . . . 42
Lubrication Points . . . . . 43
Shear Bolt Sprocket Hub . . . . . 43
Auger Flange Bearings . . . . . 43
Drive Chain . . . . . 43
Gearbox . . . . . 44
Driveline U-joints . . . . . 44
Driveline Shaft . . . . . 44

**Continue Table of Contents on next page**

© Copyright 2024 All rights Reserved

Land Pride provides this publication "as is" without warranty of any kind, either expressed or implied. While every precaution has been taken in the preparation of this manual, Land Pride assumes no responsibility for errors or omissions. Neither is any liability assumed for damages resulting from the use of the information contained herein. Land Pride reserves the right to revise and improve its products as it sees fit. This publication describes the state of this product at the time of its publication, and may not reflect the product in the future.

Land Pride is a registered trademark.

All other brands and product names are trademarks or registered trademarks of their respective holders.

*Printed in the United States of America.*

**Section 7: Specifications & Capacities . . . . 45**
**Section 8: Features & Benefits . . . . . 47**
**Section 9: Troubleshooting . . . . . 48**
**Section 10: Torque Values Chart . . . . . 49**
**Section 11: Warranty . . . . . 50**

## *Manual QR Locator*

The QR (Quick Reference) codes below will take you to the Parts Manual for this equipment. Download the appropriate App on your camera phone, open the App, point your phone on the QR code, and take a picture.

**SB10 Series** **SB15 Series** **SB25 Series**

## *Dealer QR Locator*

The QR code below will link you to available dealers for Land Pride products.

**Listed below are common practices that may or may not be applicable to the products described in this manual.**

## *Safety at All Times*

**Careful operation is your best assurance against an accident.**

**All operators, no matter how much experience they may have, should carefully read this manual and other related manuals before operating the power machine and this implement.**

- ▲ Thoroughly read and understand the "Safety Label" section. Read all instructions noted on them.
- ▲ Do not operate the equipment while under the influence of drugs or alcohol, as they impair your ability to safely and properly operate the equipment.
- ▲ The operator should be familiar with all functions of the tractor and attached implement, and be able to handle emergencies quickly.
- ▲ Make sure all guards and shields appropriate for the operation are in place and secured before operating the implement.
- ▲ Keep all bystanders away from equipment and work area.
- ▲ Start tractor from the driver's seat with hydraulic controls in neutral.
- ▲ Operate tractor and controls from the driver's seat only.
- ▲ Never dismount from a moving tractor or leave tractor unattended with engine running.
- ▲ Do not allow anyone to stand between the implement and tractor while backing up to the implement.
- ▲ Keep hands, feet, and clothing away from power-driven parts.
- ▲ While transporting and operating equipment, watch out for objects overhead and along the sides such as fences, trees, buildings, wires, etc.
- ▲ Do not turn tractor so tight as to cause hitched implement to ride up on the tractor's rear wheel.
- ▲ Store implement in a safe and secure area where children normally do not play. When needed, secure implement against falling with support blocks.

## *Look for the Safety Alert Symbol*

**The SAFETY ALERT SYMBOL indicates there is a potential hazard to personal safety and extra precaution must be taken. When you see this symbol, be alert and carefully read the message that follows it. Hazard control, and accident prevention are dependent upon the awareness, concern, prudence, and proper training of personnel involved in the operation, transport, maintenance, and storage of equipment.**

### Be Aware of Signal Words

A signal word designates a degree or level of hazard seriousness. They are:

**DANGER:** Indicates a hazardous situation that, if not avoided, will result in death or serious injury.

**WARNING:** Indicates a hazardous situation that, if not avoided, could result in death or serious injury.

**CAUTION:** Indicates a hazardous situation that, if not avoided, may result in minor or moderate injury.

### Be Aware of Special Notices

Special notices are intended to point out important and helpful information that should be followed. They are usually placed inside a box. They are:

**IMPORTANT:** Indicates that equipment or property damage could result if instructions are not followed.

**NOTE:** Indicates supplementary explanations that will be helpful when using the equipment.

## Safety Precautions for Children

**Tragedy can occur if the operator is not alert to the presence of children, Children generally are attracted to implements and their work.**

- ▲ Never assume children will remain where you last saw them.
- ▲ Keep children out of the work area and under the watchful eye of a responsible adult.
- ▲ Be alert and shut the implement and tractor down if children enter the work area.
- ▲ Never carry children on the tractor or implement. There is not a safe place for them to ride. They may fall off and be run over or interfere with the control of the power machine.
- ▲ Never allow children to operate the power machine, even under adult supervision.
- ▲ Never allow children to play on the power machine or implement.
- ▲ Use extra caution when backing up. Before the tractor starts to move, look down and behind to make sure the area is clear.

## Tractor Shutdown & Storage

- ▲ If engaged, disengage power take-off.
- ▲ Park on solid, level ground and lower implement to ground or onto support blocks.
- ▲ Put tractor in park or set park brake.
- ▲ Turn off engine and remove ignition key to prevent unauthorized starting.
- ▲ Relieve all hydraulic pressure to auxiliary hydraulic lines.
- ▲ Wait for all components to stop before leaving operator's seat.
- ▲ Use steps, grab-handles and anti-slip surfaces when stepping on and off the tractor.

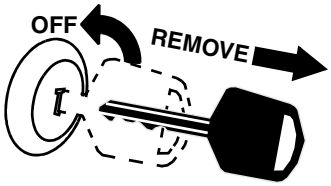

**Listed below are common practices that may or may not be applicable to the products described in this manual.**

## Use A Safety Chain

- ▲ A safety chain will help control drawn machinery should it separate from the tractor drawbar.
- ▲ Use a chain with the strength rating equal to or greater than the gross weight of the towed implement.
- ▲ Attach the chain to the tractor drawbar support or other specified anchor location. Allow only enough slack in the chain to permit turning.
- ▲ Always hitch the implement to the machine towing it. Do not use the safety chain to tow the implement.

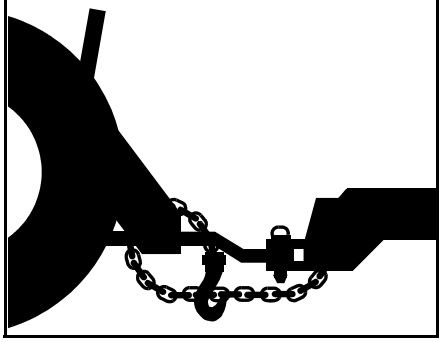

## Towing Safely

- ▲ Comply with federal, state, and local laws.
- ▲ Use towing vehicle and trailer of adequate size and capacity. Secure equipment towed on a trailer with chocks, tie downs, and chains.
- ▲ **IMPORTANT:** Do not tow a load that is more than double the weight of the vehicle towing the load.
- ▲ Sudden braking can cause a towed trailer to swerve unexpectedly. Reduce speed if trailer is not equipped with brakes.

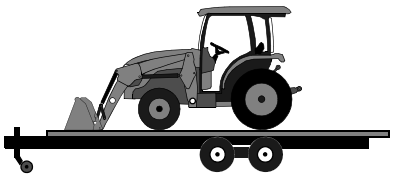

## Transport Safely

- ▲ Comply with federal, state, and local laws.
- ▲ Avoid contact with any overhead utility lines or electrically charged conductors.
- ▲ Engage park brake when stopped on an incline.
- ▲ Maximum transport speed for an implement is 20 mph (32 km/h). DO NOT EXCEED.
- ▲ Never travel at a speed which does not allow adequate control of steering and stopping. Some rough terrains require a slower speed. Sudden braking can cause a towed load to swerve and upset.
- ▲ Do not tow an implement that, when fully loaded, weights more than 1.5 times the weigh of towing vehicle.

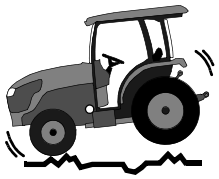

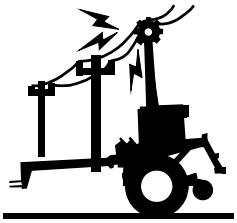

## Tire Safety

- ▲ Tire changing can be dangerous and must be performed by trained personnel using the correct tools and equipment.
- ▲ Always properly match the wheel size to the properly sized tire.
- ▲ Always maintain correct tire pressure. Do not inflate tires above recommended pressures shown in the Operator's Manual.
- ▲ When inflating tires, use a clip-on chuck and extension hose long enough to allow you to stand to one side and NOT in front of or over the tire assembly. Use a safety cage if available.
- ▲ Securely support the implement when changing a wheel.
- ▲ When removing and installing wheels, use wheel handling equipment adequate for the weight involved.
- ▲ Make sure wheel bolts have been tightened to the specified torque.

## Practice Safe Maintenance

- ▲ Understand procedure before doing work. Refer to the Operator's Manual for additional information.
- ▲ Work on a level surface in a clean, dry area that is well-lit.
- ▲ Lower implement to the ground and follow all shutdown procedures before leaving the operator's seat to perform maintenance.
- ▲ Do not work under any hydraulically supported equipment. It can settle, suddenly leak down, or be lowered accidentally. If it is necessary to work under the equipment, securely support it with stands or suitable blocking beforehand.
- ▲ Use properly grounded electrical outlets and tools.
- ▲ Use correct tools and equipment for the job that are in good condition.
- ▲ Allow equipment to cool before working on it.
- ▲ Disconnect battery ground cable (-) before servicing or adjusting electrical systems or before welding on implement.
- ▲ Inspect all parts. Make certain parts are in good condition & installed properly.
- ▲ Replace parts on this implement with genuine Land Pride parts only. Do not alter this implement in a way which will adversely affect its performance.
- ▲ Do not grease or oil implement while it is in operation.
- ▲ Remove buildup of grease, oil, or debris.
- ▲ Always make sure any material and waste products from the repair and maintenance of the implement are properly collected and disposed.
- ▲ Remove all tools and unused parts from equipment before operation.
- ▲ Do not weld or torch on galvanized metal as it will release toxic fumes.

**Listed below are common practices that may or may not be applicable to the products described in this manual.**

## Prepare for Emergencies

- ▲ Be prepared if a fire starts.
- ▲ Keep a first aid kit and fire extinguisher handy.
- ▲ Keep emergency numbers for doctor, ambulance, hospital, and fire department near the phone.

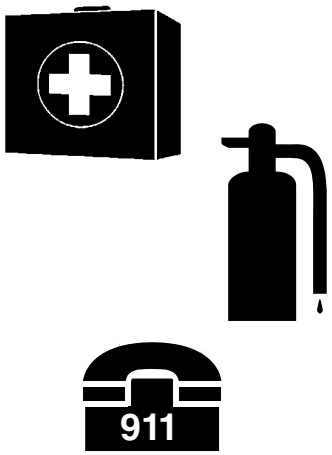


## Wear Personal Protective Equipment (PPE)

- ▲ Wear protective clothing and equipment appropriate for the job such as safety shoes, safety, glasses, hard hat, dust mask, and ear plugs.
- ▲ Clothing should fit snug without fringes and pull strings to avoid entanglement with moving parts.
- ▲ Prolonged exposure to loud noise can cause hearing impairment or hearing loss. Wear suitable hearing protection such as earmuffs or earplugs.
- ▲ Operating a machine safely requires the operator's full attention. Avoid wearing headphones while operating equipment.

## Avoid High Pressure Fluids

- ▲ Escaping fluid under pressure will penetrate the skin or eyes causing serious injury.
- ▲ Relieve all residual pressure before disconnecting hydraulic lines or performing work on the hydraulic system.
- ▲ Make sure all hydraulic fluid connections are properly tightened/torqued and all hydraulic hoses and lines are in good condition before applying pressure to the system.
- ▲ Use a piece of paper or cardboard, NOT BODY PARTS, to check for suspected leaks.
- ▲ Wear protective gloves and safety glasses or goggles when working with hydraulic systems.
- ▲ **DO NOT DELAY.** If an accident occurs, seek immediate emergency medical care or gangrene may result.

## Use Safety Lights and Devices

- ▲ A slow moving power machine can create a hazard when driven on public roads. They are difficult to see, especially at night.
- ▲ Flashing warning lights and turn signals are recommended whenever driving on public roads.
- ▲ For tractors and other agriculture equipment, a Slow Moving Vehicle (SMV) sign is required when traveling on public roads.

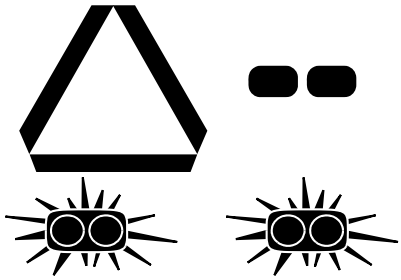

## Use Seat Belt and ROPS

- ▲ Land Pride recommends the use of a CAB or roll-over-protective-structures (ROPS) and seat belt in almost all power machines. Combination of a CAB or ROPS and seat belt will reduce the risk of serious injury or death if the power machine should be upset.
- ▲ If ROPS is in the locked-up position, fasten seat belt snugly and securely to help protect the operator against serious injury or death from falling and/or machine overturn.

## Keep Riders Off Machinery

- ▲ Never carry riders on the tractor or implement.
- ▲ Riders obstruct operator's view and interfere with the control of the power machine.
- ▲ Riders can be struck by objects or thrown from the equipment.
- ▲ Never use the tractor or implement to lift or transport riders.

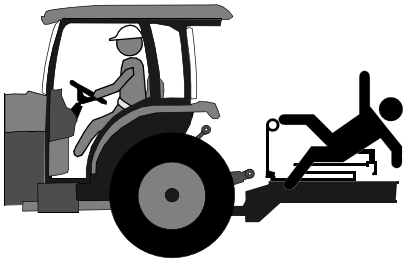

**Listed below are common practices that may or may not be applicable to the products described in this manual.**

## Avoid Crystalline Silica (Quartz) Dust

**Because crystalline silica is a basic component of sand and granite, many activities at construction sites produce dust containing crystalline silica. Trenching, sawing, and boring of material containing crystalline silica can produce dust containing crystalline silica particles. This dust can cause serious injury to the lungs (silicosis).**

**There are guidelines which should be followed if crystalline silica (quartz) is present in the dust.**

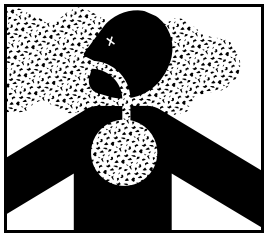

- ▲ Be aware of and follow OSHA (or other local, State, or Federal) guidelines for exposure to airborne crystalline silica.
- ▲ Know the work operations where exposure to crystalline silica may occur.
- ▲ Participate in air monitoring or training programs offered by the employer.
- ▲ Be aware of and use optional equipment controls such as water sprays, local exhaust ventilation, and enclosed cabs with positive pressure air conditioning if the machine has such equipment. Otherwise respirators shall be worn.
- ▲ Where respirators are required, wear a respirator approved for protection against crystalline silica containing dust. Do not alter respirator in any way. Workers who use tight-fitting respirators can not have beards/ mustaches which interfere with the respirator seal to the face.
- ▲ If possible, change into disposable or washable work clothes at the work site; shower and change into clean clothing before leaving the work site.
- ▲ Do not eat, drink, use tobacco products, or apply cosmetics in areas where there is dust containing crystalline silica.
- ▲ Store food, drink, and personal belongings away from the work area.
- ▲ Wash hands and face before eating, drinking, smoking, or applying cosmetics after leaving the exposure area.

## Handle Chemicals Properly

- ▲ Protective clothing should be worn.
- ▲ Handle all chemicals with care.
- ▲ Follow instructions on container label.
- ▲ Agricultural chemicals can be dangerous. Improper use can seriously injure persons, animals, plants, soil, and property.
- ▲ Inhaling smoke from any type of chemical fire can be a serious health hazard.
- ▲ Store or dispose of unused chemicals as specified by the chemical manufacturer.

## Dig Safe - Avoid Underground Utilities

- ▲ USA: Call 811
  CAN:
  http://www.clickbeforeyoudig.com
- ▲ Always contact your local utility companies (electrical, telephone, gas, water, sewer, and others) before digging so that they may mark the location of any underground services in the area.
- ▲ Be sure to ask how close you can work to the marks they positioned.

This page left blank intentionally.

## Safety Labels

*Your Snow Blower comes equipped with all safety labels in place. They were designed to help you safely operate your implement. Read and follow their directions.*

1. *Keep all safety labels clean and legible.*
2. *Refer to this section for proper label placement. Replace all damaged or missing labels. Order new labels from your nearest Land Pride dealer. To find your nearest dealer, visit our dealer locator at www.landpride.com.*
3. *Some new equipment installed during repair requires safety labels to be affixed to the replaced component as specified by Land Pride. When ordering new components make sure the correct safety labels are included in the request.*
4. *Refer to this section for proper label placement. To install new labels:*
   a. *Clean surface area where label is to be placed.*
   b. *Spray soapy water onto the cleaned area.*
   c. *Peel backing from label and press label firmly onto the surface.*
   d. *Squeeze out air bubbles with edge of a credit card or with a similar type of straight edge.*

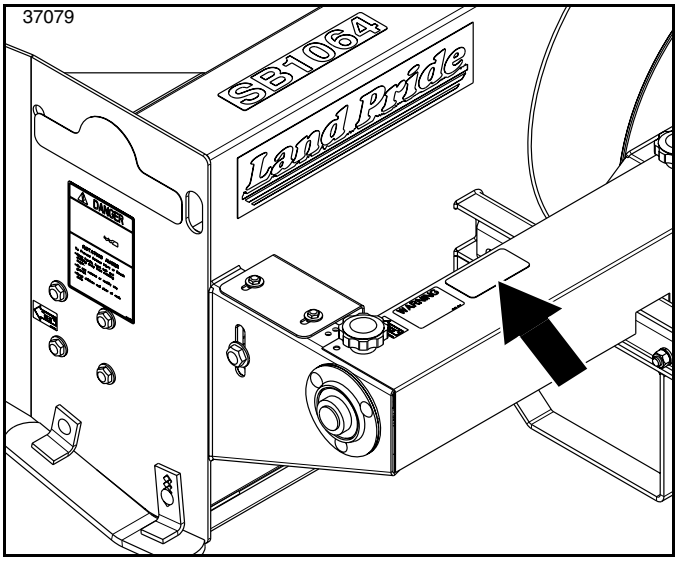


70575

**818-798C**
Warning: Pinch Point Hazard
1Place: As shown on shaft cover.

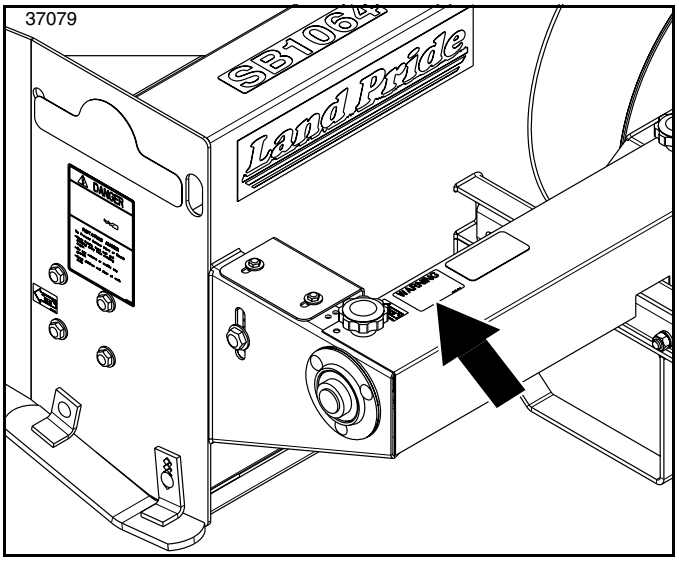


70333

**818-205C**
Warning: Moving Parts Hazard
1 Place: As shown on shaft cover.

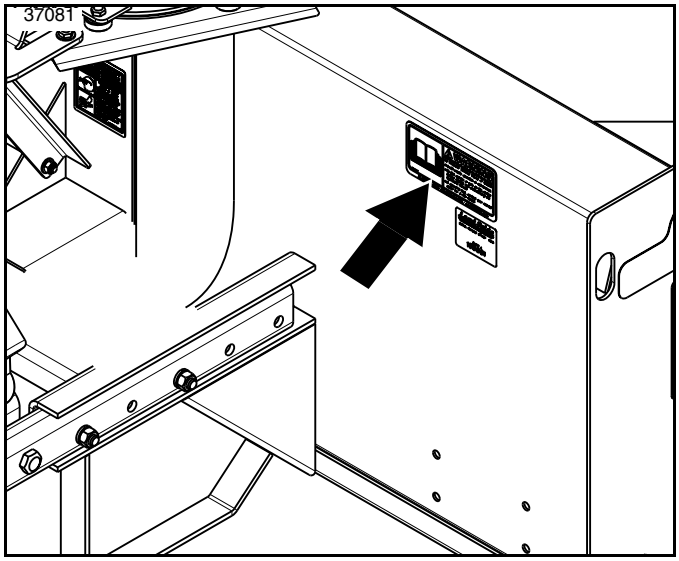


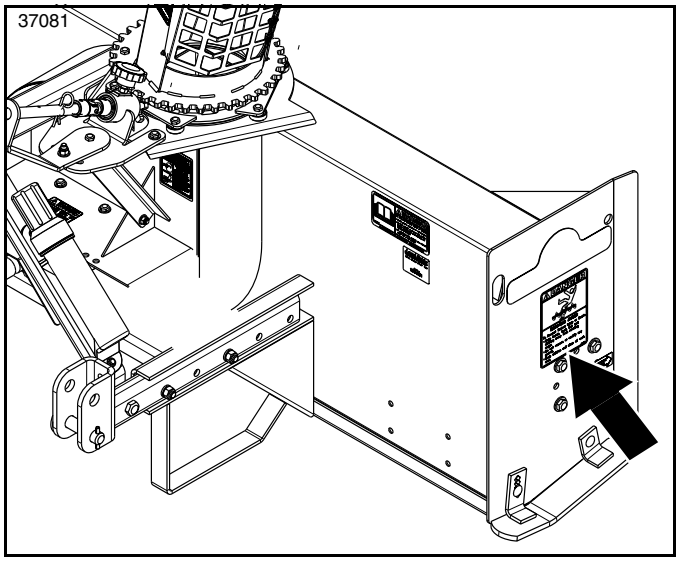


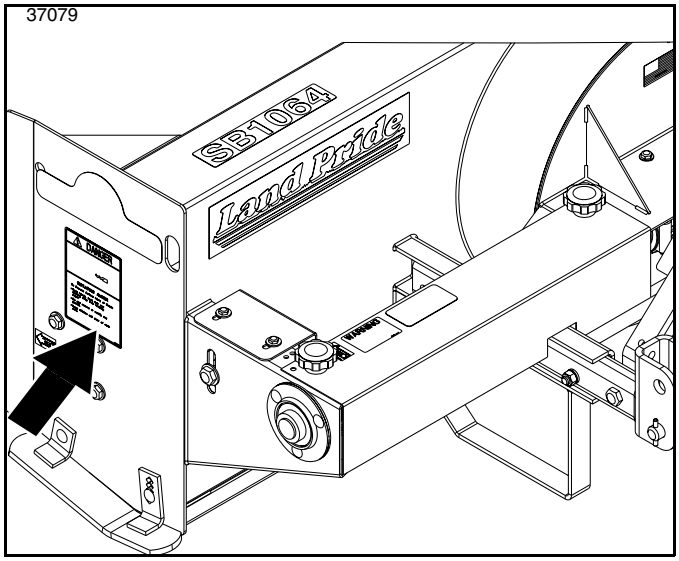


70243

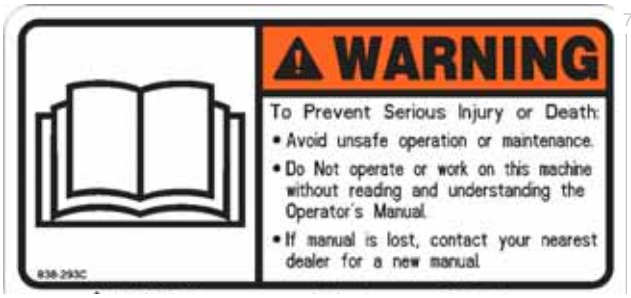


**838-293C**

Warning: Read Operator's Manual - General Warning

1 Place: As shown.

70644

**818-634C**

Danger: Rotating Auger Hazard

2 Places: One on each end panel.

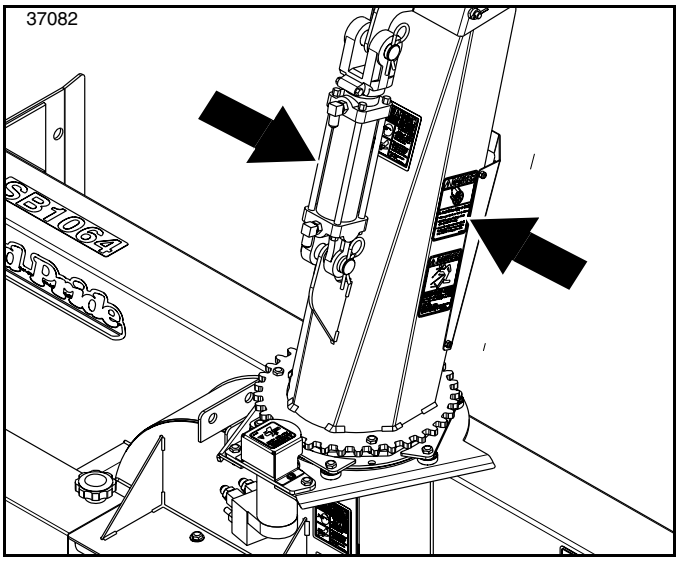


70639

**848-840C**
Danger: Entering Discharge Chute Hazard
2 Places: One on each side of chute.

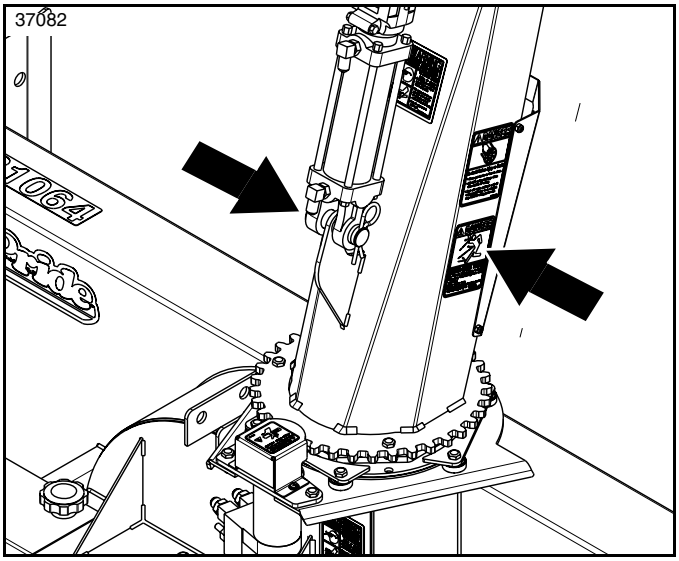


70640

**818-132C**
Danger: Thrown Object Hazard
2 Places: One on each side of chute.

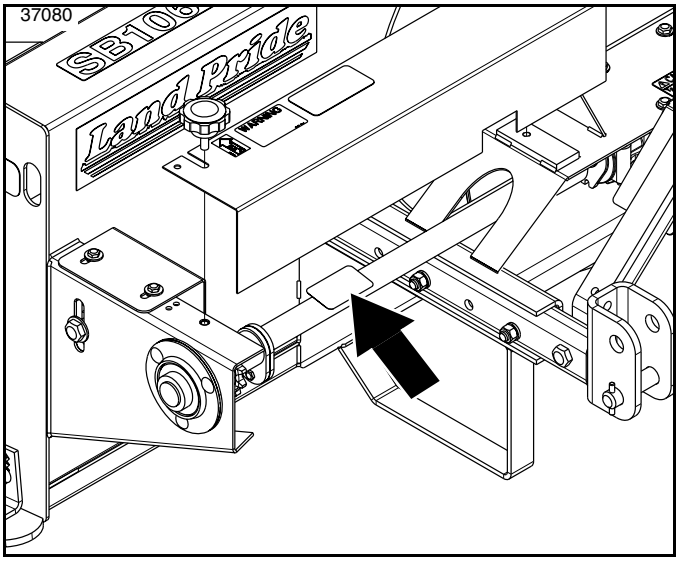


70642

**818-522C**
Danger: Moving Parts Hazard:
1 Place: On gearbox shaft.

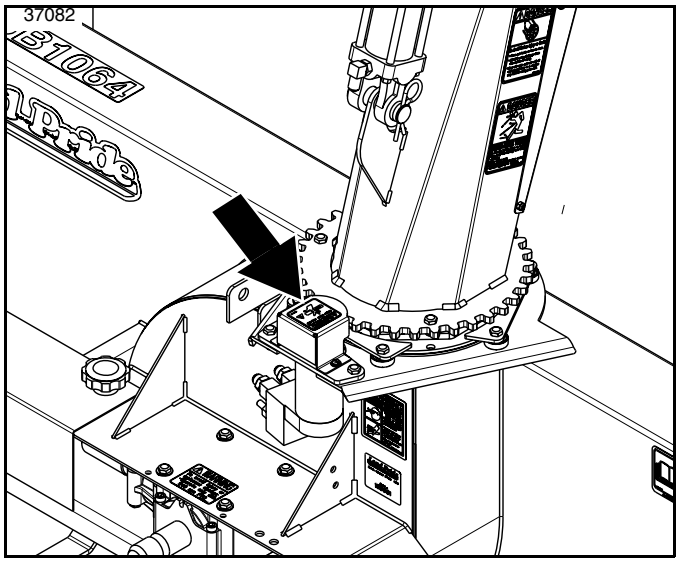


70247

**858-148C**

Warning: Pinch Point Hazard

1 Place: As Shown

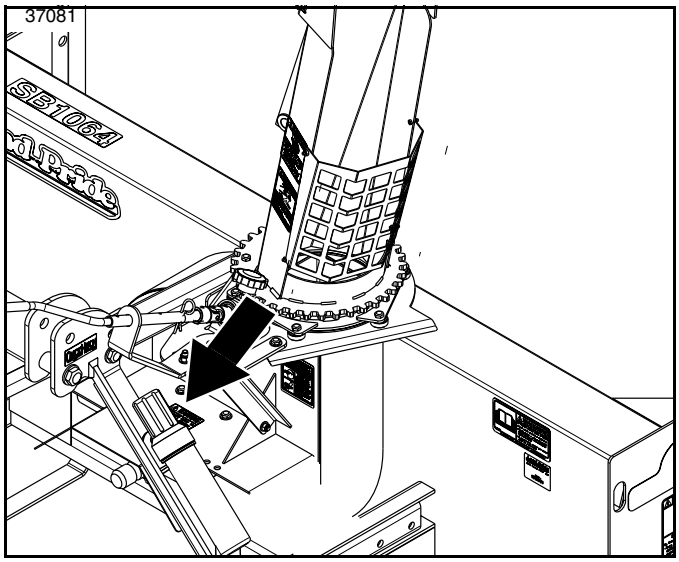


70382

**818-130C**

Warning:
Operate only with 540 rpm Power Take-off Speed

1 Place: On top of gearbox mount.

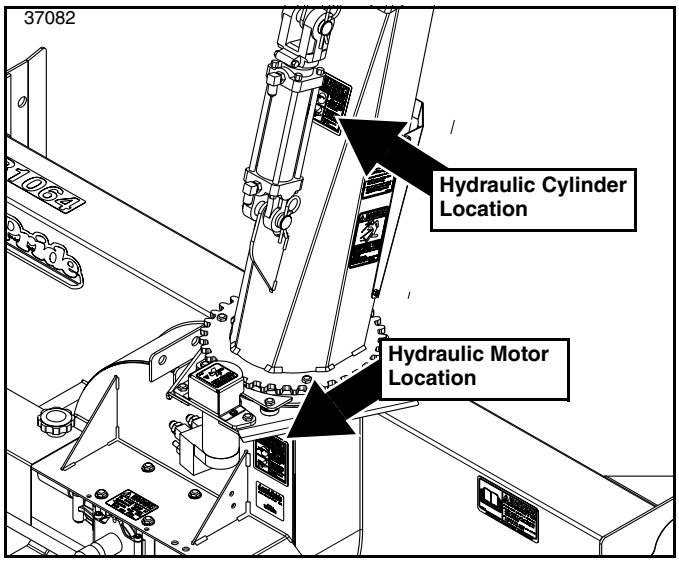


70641

**848-747C**

Warning: High Pressure Fluid Hazard

2 Places: Used only with hydraulic motor and hydraulic cylinders.

33302

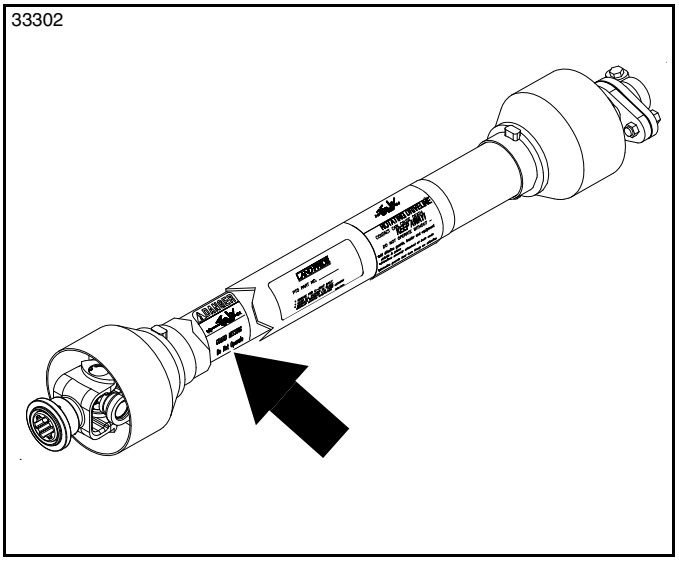

70374

**818-540C**

Danger: Guard Missing - DO NOT Operate

1Place: On the 3-point driveline outer profile

33302

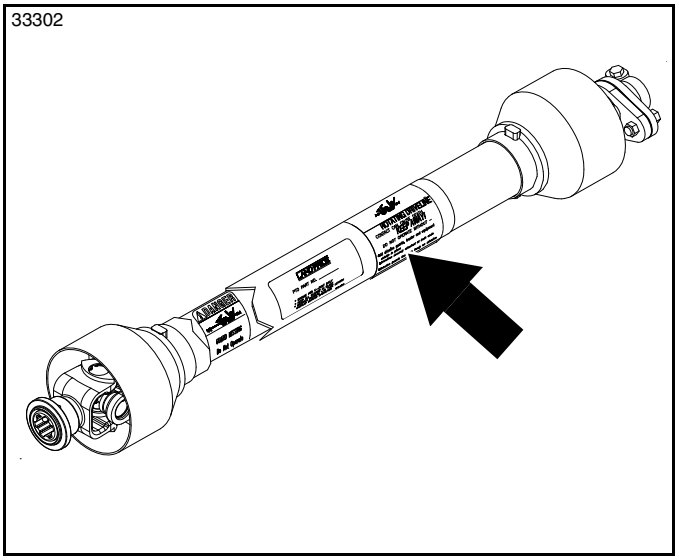

70375

**818-552C**

Danger: Rotating Driveline - Keep Away

1 Place: On the 3-point driveline outer shield

Land Pride welcomes you to the growing family of new product owners. This Snow Blower has been designed with care and built by skilled workers using quality materials. Proper assembly, maintenance, and safe operating practices will help you get years of satisfactory use from this product.

## Application

Land Pride offers the SB10, SB15, and SB25 Series of Snow Blowers ranging from 51" to 84" (130 to 213 cm) in width. They are 3-point rear mounted units for attaching to tractors ranging from 30 to 105 hp (22 kW to 78 kW) with Cat. I or Cat. II hitches and are Quick Hitch adaptable. These Snow Blowers are primarily designed to remove snow from driveways, parking lots, and sidewalks. Optional lower wear bar, outer depth wear bar, and inner or outer depth shoes can be purchased with all models to increase the life of the units.

See **"Specifications & Capacities"** on page 45 and **"Features & Benefits"** on page 47 for additional information and performance enhancing options.

## Using This Manual

- This Operator's Manual is designed to help familiarize the operator with safety, assembly, operation, adjustments, troubleshooting, and maintenance. Read this manual and follow the recommendations to help ensure safe and efficient operation.
- The information contained within this manual was current at the time of printing. Some parts may change slightly to assure you of the best performance.
- To order a new Operator's or Parts Manual, contact your authorized dealer. Manuals can also be downloaded, free-of-charge, from our website at www.landpride.com.

### Terminology

**See Figure 1:** "Right", "Left", "Front", & "Back" as used in this manual is determined by facing in the direction the machine will operate while in use unless otherwise stated.

## Owner Assistance

The dealer should complete the Online Warranty Registration at the time of purchase. This information is necessary to provide you with quality customer service.

The parts on your Snow Blower have been specially designed by Land Pride and should only be replaced with genuine Land Pride parts. Contact a Land Pride dealer if customer service or repair parts are required. Your Land Pride dealer has trained personnel, repair parts, and equipment needed to service the implement.

### Serial Number

For quick reference and prompt service, record model and serial number on the inside cover page and again on the warranty page. Always provide model number and serial number when ordering parts and in all correspondences with your Land Pride dealer. For location of your serial number plate, see Figure 1.

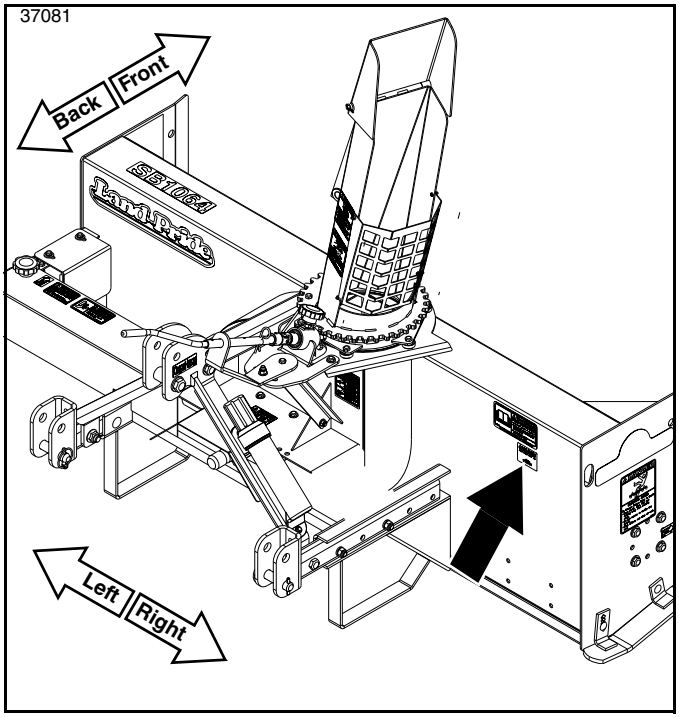


**Serial Number Plate Location**
**Figure 1**

### Further Assistance

Your dealer wants you to be satisfied with your new Snow Blower. If for any reason you do not understand any part of this manual or are not satisfied with the service received, the following actions are suggested:

1. Discuss any problems you have with your implement with your dealership service personnel so they can address the problem.
2. If you are still not satisfied, seek out the owner or general manager of the dealership, explain the question/problem, and request assistance.
3. For further assistance write to:

**Land Pride Service Department**
**1525 East North Street**
P.O. Box 5060
Salina, Ks. 67402-5060

E-mail address
lpservicedept@landpride.com

## Tractor Requirements

Tractor horsepower and hitch category should be within the range noted below. Tractors outside the horsepower range must not be used.

Tractor horsepower rating
- SB10 Series . . . . . 18 to 32 hp (13 kW)
- SB15 Series . . . . . .30-59 hp (22-44 kW)
- SB25 Series . . . . . .43-105 hp (32-78 kW)

Hitch type:
- SB10 Series . . . . . .3-Point Cat. I
- SB15 Series . . . . . .3-Point Cat. I
- SB25 Series . . . . . .3-Point Cat. I & II

Power take-off speed . . . . . 540 rpm

Hydraulic quick disconnect outlets (Optional)
- Chute rotational adjustment. . . . . .Duplex outlet
- Deflector angle adjustment . . . . . .Duplex outlet

Tractor weight. . . . . See warning below

**WARNING**

*To avoid serious injury or death:*

*Lightweight tractors with rear attached implements may need weights added to the front to maintain steering control. Consult your tractor Operator's Manual to determine weight requirements and maximum limitations.*

## Torque Requirements

Refer to **"Torque Values Chart"** on page 49 to determine correct torque values for common bolts. See **"Additional Torque Values"** at bottom of chart for exceptions to standard torque values.

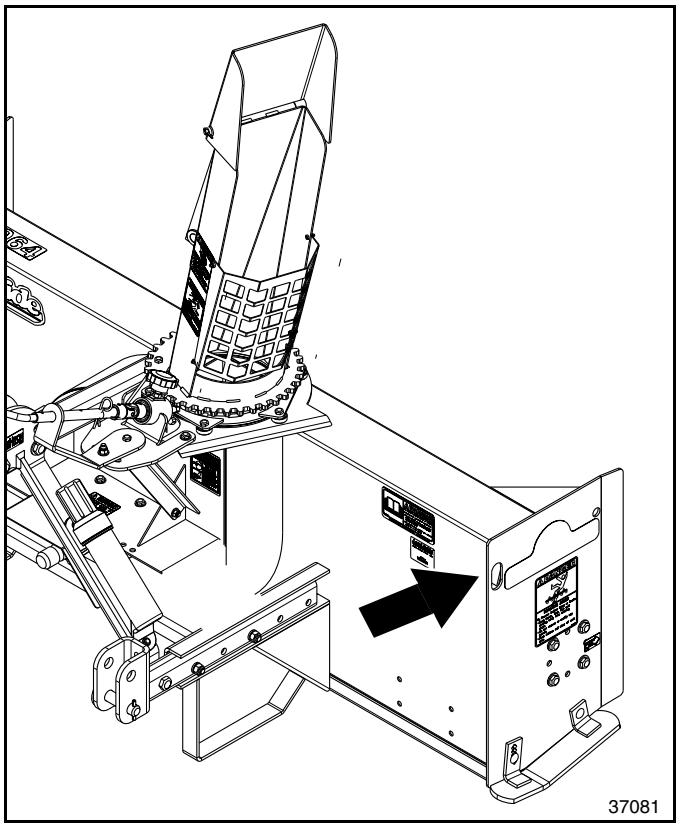


**Lift Points**
**Figure 1-1**

## Dealer Set-up Instructions

When included, it is simpler to assemble the optional outer skid shoes or outer wear bars before removing the shipping crate. See **"Skid Shoes, Outer"** or **"Wear Bars, Outer"** on page 18 for detailed installation instructions.

### Loading & Unloading

***Refer to Figure 1-1:***

There are two lifting holes (one on each end panel). These lift holes are provided for attaching a lift chain to the Snow Blower during loading and unloading.

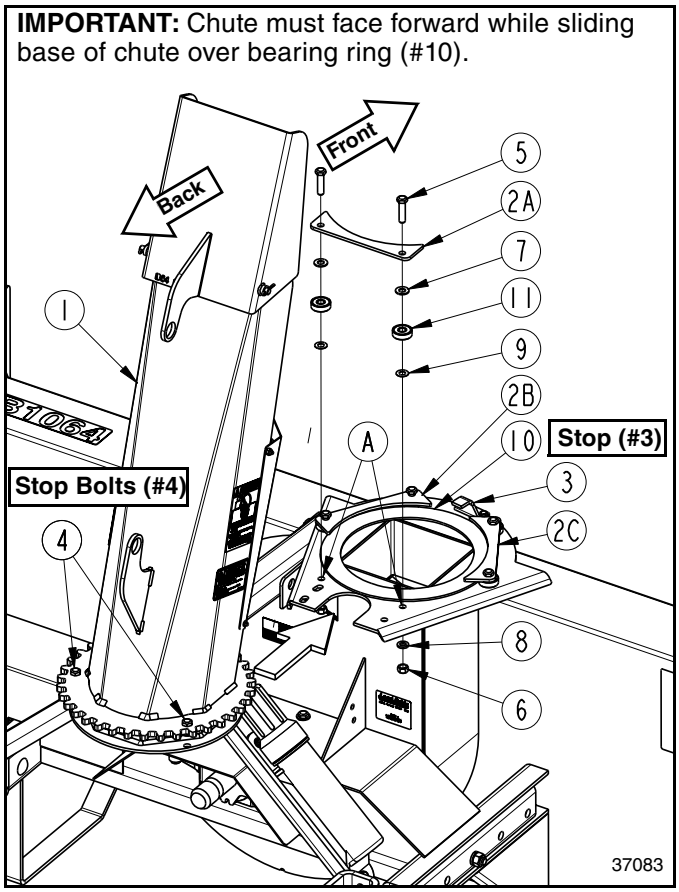


SB10 Chute Assembly
Figure 1-2

## SB10 Chute Assembly

***Refer to Figure 1-2:***

1. Remove bearing strap (#2A) from Snow Blower housing. Do not remove UHMW chute bearing ring (#10). Keep hardware for re-installation.
2. Position discharge chute (#1) so that the spout is facing straight forward with stop bolts (#4) on the back side as shown.
3. Keep chute facing straight forward. Slide base of discharge chute (#1) over UHMW chute bearing ring (#10) until base of chute is fully under remaining bearing straps (#2B & 2C).
4. Reattach bearing strap (#2A) to the Snow Blower housing by inserting existing 3/8"-16 x 1 1/2" GR5 bolts (#5) through bearing strap (#2A), flat washers (#7), chute bearings (#11), machine washers (#9), and flange holes “A”.
5. Secure bolts (#5) with existing lock washers (#8) and hex nuts (#6). Tighten nuts to the correct torque.

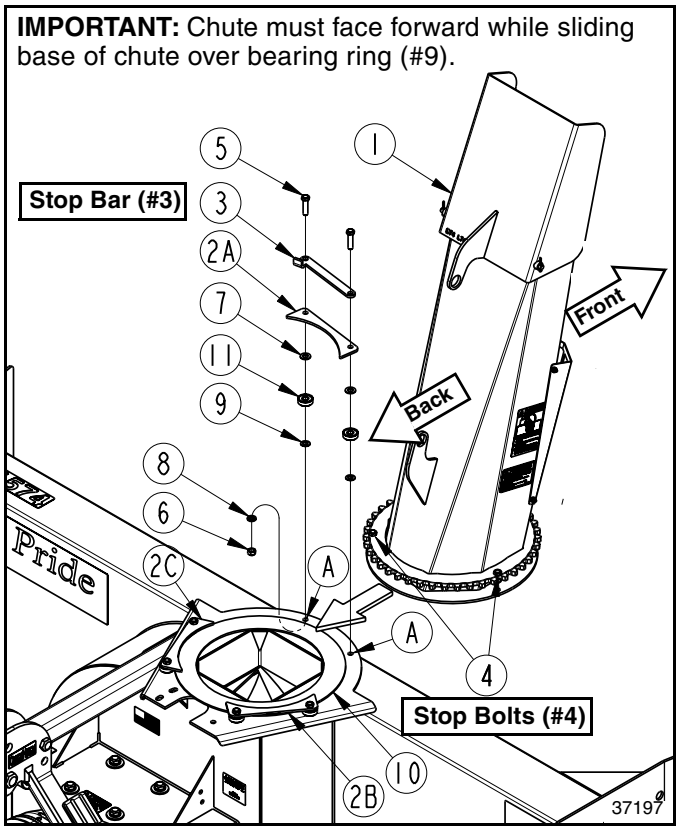


SB15 & SB25 Chute Assembly
Figure 1-3

## SB15 & 25 Chute Assembly

***Refer to Figure 1-3:***

1. Remove rotational stop (#3) and bearing strap (#2A) from Snow Blower housing. Do not remove UHMW chute bearing ring (#10). Keep removed hardware for re-installation.
2. Position discharge chute (#1) so that the spout is facing straight forward with stop bolts (#4) on the back side as shown.
3. Keep chute facing straight forward. Slide base of discharge chute (#1) over UHMW chute bearing ring (#10) until base of chute is fully under remaining bearing straps (#2B & 2C).
4. Reattach rotational stop (#3) and bearing strap (#2A) to the Snow Blower housing by inserting existing 3/8"-16 x 1 1/2" GR5 bolts (#5) through rotational stop (#3), bearing strap (#2A), flat washers (#7), chute bearings (#11), machine washers (#9), and flange holes “A”.
5. Secure bolts (#5) with existing lock washers (#8) and hex nuts (#6). Tighten nuts to the correct torque.

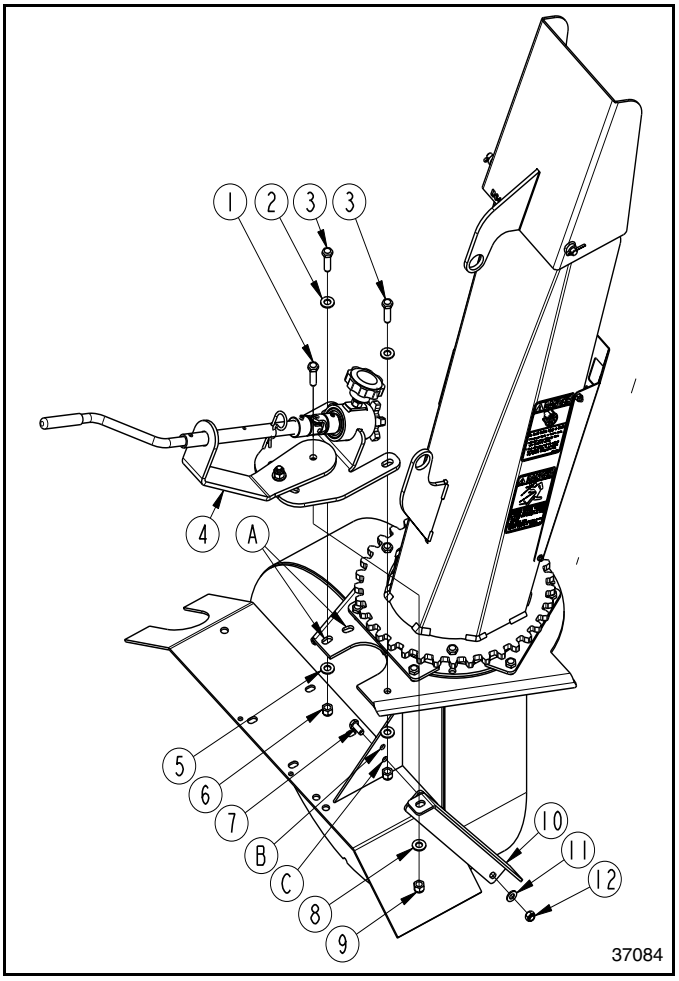


**Manual Chute Rotation Assembly**
**Figure 2-1**

## Manual Chute Rotation

***Refer to Figure 2-1:***

1. Attach manual chute rotation mount (#5) to blower housing flange as shown with two 3/8"-16 x 1 1/4" GR5 bolts (#8), flat washers (#13), and locknuts (#11). Draw nuts up snug, do not tighten at this time.
2. Attach rotation brace (#6) to mount (#5) with 3/8"-16 x 1 1/4" GR5 bolt (#8), flat washer (#13), and locknut (#11). Draw locknut up snug, do not tighten at this time.
3. Attach rotation brace (#6) to blower housing gusset hole “B” or “C” with 5/16"-18 x 3/4" bolt (#7), washer (#12), and locknut (#10) as follows:
   - SB15 & SB25 Series: Attach to hole “B”.
   - SB10 Series: Attach to hole “C”.

   Draw locknut up snug, do not tighten at this time.

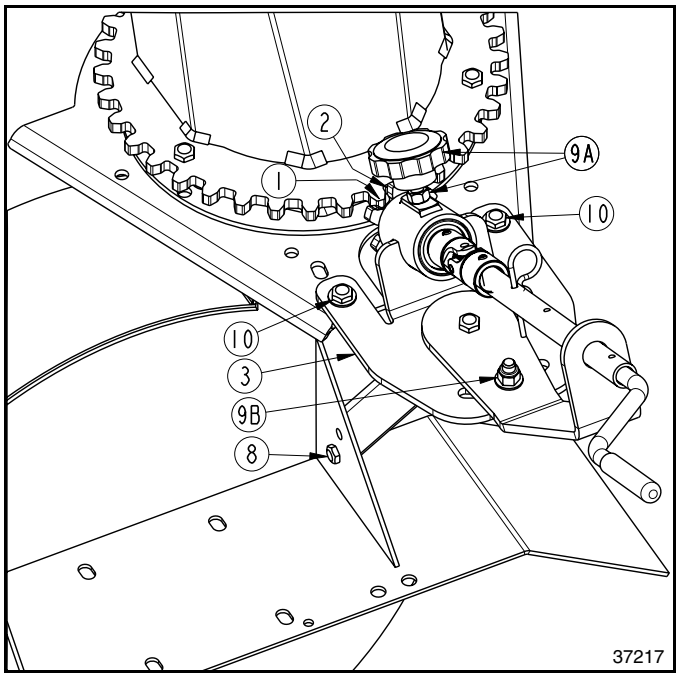


**Manual Chute Rotation Assembly**
**Figure 2-2**

## Sprocket Adjustment

***Refer to Figure 2-2:***

**NOTE:** Face of teeth in sprocket (#2) must mesh with face of teeth in sprocket (#1) without any of the teeth in either sprocket binding or rubbing against other surfaces on the two sprockets.

1. Adjust chute rotation mount (#3) in mainframe slots until sprocket (#2) is aligned with gear teeth (#1). Make sure sprocket turns freely. Draw bolts (#10) up snug. Do not tighten at this time.
2. Loosen jam nut & knob (#9A) until gear teeth in sprocket (#2) align with gear teeth in sprocket (#1). tighten knob & jam nut (#9A) up snug. Do not tighten at this time.
3. Continue to adjust shaft adjusters (#4 & #5), in/out movement of sprocket (#2), and chute rotational mount (#3) until gear teeth of sprockets (#1 & #2) align properly.
4. Tighten bolts (#8, #9B, & #10) to the correct torque.
5. Rotate crank handle both directions to make sure sprockets (#1 & #2) still rotate freely and effectively.
6. Once chute is at desired output location. Tighten knob & jam nut (#9A).

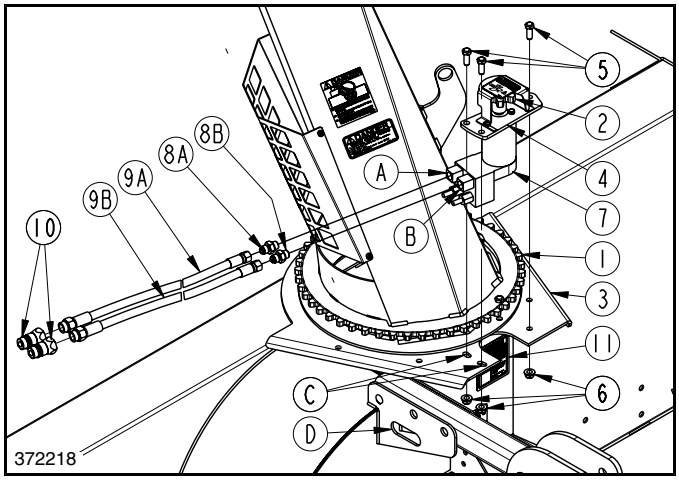


**Hydraulic Chute Rotation Assembly (SB2584 Shown)**
**Figure 2-3**

## Hydraulic Chute Rotation

***Refer to Figure 2-3:***

**IMPORTANT:** Adjustment screws on hydraulic motor (#7) are preset at the factory. Do not change factory settings. Changing factory settings can cause structural damage to the Snow Blower.

1. Attach hydraulic motor mount (#4) to mainframe (#3) as shown with three 3/8"-16 x 1" GR5 cap screws (#5) and hex flange locknuts (#6). Draw locknuts up snug, do not tighten at this time.
2. Adjust hydraulic motor mount (#4) in slots “A” until drive gear teeth (#2) are fully engaged with driven gear teeth (#1). Make sure drive gear (#2) does not grind against driven gear (#1).
3. Hold hydraulic motor mount (#4) in this position and tighten all three hex flange locknuts (#6) to the correct torque.
4. Attach quick disconnect couplers (#10) (couplings furnished by customer) to 3/4" MORB end of 3/8" x 81" hydraulic hoses (#9A & #9B) and tighten.
5. Attach 9/16" MORB x 9/16" MJIC adapter (#8A) to hydraulic motor port “A” and tighten.
6. **SB2584 model only:** Insert 9/16" FJIC end of hydraulic hoses (#9A & #9B) through slots “D”.
7. Attach hydraulic hose (#9A) to adapter (#8A) and tighten.
8. Attach 9/16" MORB x 9/16" MJIC adapter (#8B) to hydraulic motor port “B” and tighten.
9. Attach hydraulic hose (#9B) to adapter (#8B) and tighten.
10. Attach High Pressure Fluid Decal 848-747C (#11) in the location shown. See **“Safety Labels”** on page 6 for detailed instructions.
11. Coil hydraulic hoses (#10) around Snow Blower mainframe for safe keeping.

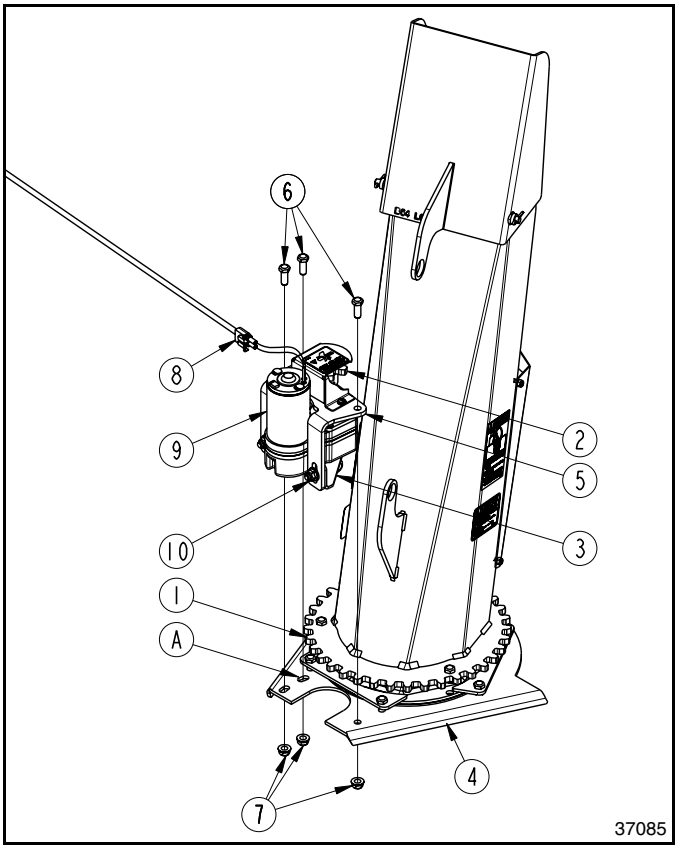


**Electric Chute Rotation Assembly**
**Figure 2-4**

## Electric Chute Rotation

***Refer to Figure 2-4:***

1. Attach upper motor mount (#5) to mainframe (#4) as shown with three 3/8"-16 x 1" GR5 bolts (#6) and hex flange locknuts (#7). Draw locknuts up snug, do not tighten at this time.
2. Adjust upper motor mount (#5) in slots “A” until drive gear (#2) is fully engaged with driven gear (#1). Make sure drive gear (#2) does not grind against driven gear (#1).
3. Hold upper motor mount (#5) in this position and tighten all three hex flange locknuts (#7) to the correct torque.
4. Check vertical height of drive gear (#2). It should be at the same height as the driven gear (#1). If needed, change drive gear height as follows:
   a. Loosen 3/8"-16 hex flange locknuts (#10) and adjust lower motor mount up or down until top of drive gear (#2) is even with top of driven gear (#1).
   b. Tighten hex flange locknuts (#10) to the correct torque.
5. Plug wire harness (#8) to electric motor (#9).
6. Coil wire harness (#8) up and store on the Snow Blower mainframe.

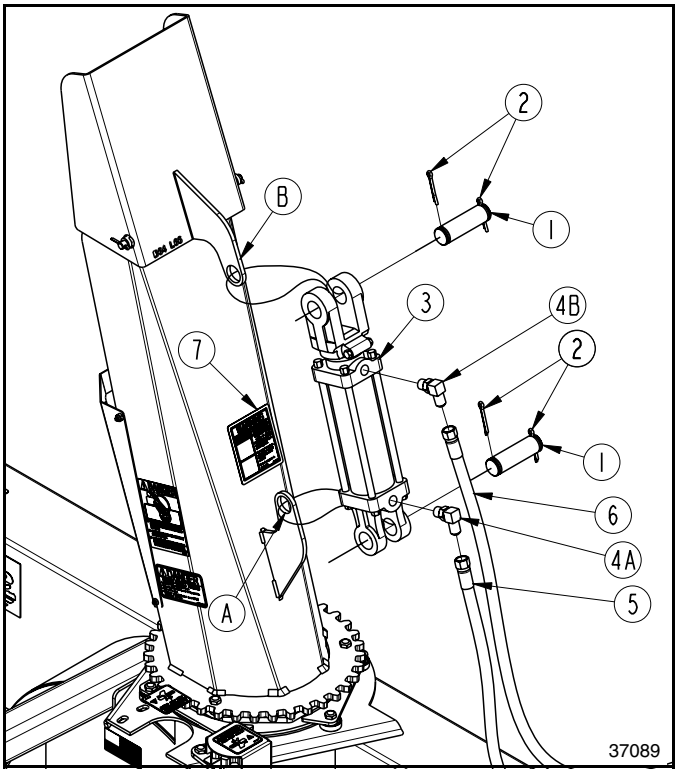


**Hydraulic Deflector Assembly**
**Figure 2-5**

## Hydraulic Deflector Assembly

***Refer to Figure 2-5:***

1. Screw O-ring end of 9/16" elbows (#4A & #4B) into hydraulic ports of cylinder (#3). Do not tighten elbows at this time.
2. Screw 1/4" x 80" long hydraulic hose (#5) to elbow (#4A) until tight.
3. Screw 1/4" x 85" long hydraulic hose (#6) to elbow (#4B) until tight.
4. Attach base end of hydraulic cylinder (#3) to lower chute lug “A” with 1" clevis pin (#1). Secure clevis pin with cotter pins (#2). Bend one or more legs of cotter pins (#2) to keep pins from falling out.
5. Attach rod end of hydraulic cylinder (#3) to deflector lug “B” with 1" clevis pin (#1). Secure clevis pin with cotter pins (#2). Bend one or more legs of cotter pins (#2) to keep pins from falling out.
6. Tighten elbows (#4A & #4B) to hydraulic cylinder (#3) until tight.
7. Screw quick disconnect couplings (couplings furnished by customer) to hydraulic hoses (#5 & #6) until tight.
8. Attach High Pressure Fluid Decal 848-747C (#7) in the location shown. See **“Safety Labels”** on page 6 for installation instructions.
9. Coil hydraulic hoses (#5 & #6) around Snow Blower mainframe for safe keeping.

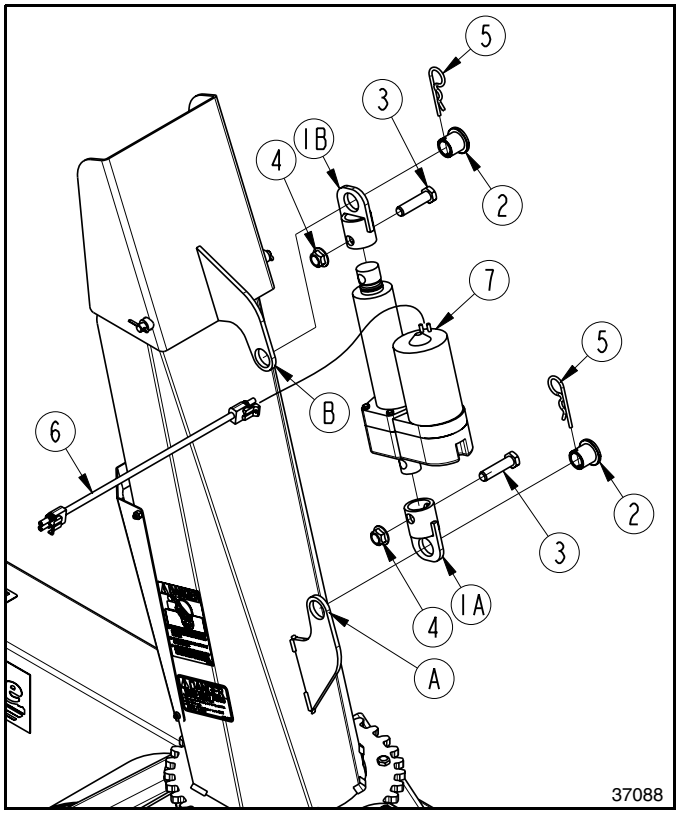


**Electric Deflector Assembly**
**Figure 2-6**

## Electric Deflector Assembly

***Refer to Figure 2-6:***

1. Attach actuator rod ends (#1A & #1B) to both ends of actuator (#7) as shown with 1/2"-13 x 1 3/4" GR5 cap screws (#3) and hex flange locknuts (#4). Tighten locknuts to the correct torque.
2. Attach lower rod end (#1A) to lower chute lug “A” with adjustment pin (#2). Secure adjustment pin with hairpin cotter (#5).
3. Attach upper rod end (#1B) to deflector lug “B” with adjustment pin (#2). Secure adjustment pin with hairpin cotter (#5).
4. Attach wire harness (#6) to electric motor (#7).
5. Coil wire harness (#6) up and store on the Snow Blower mainframe.

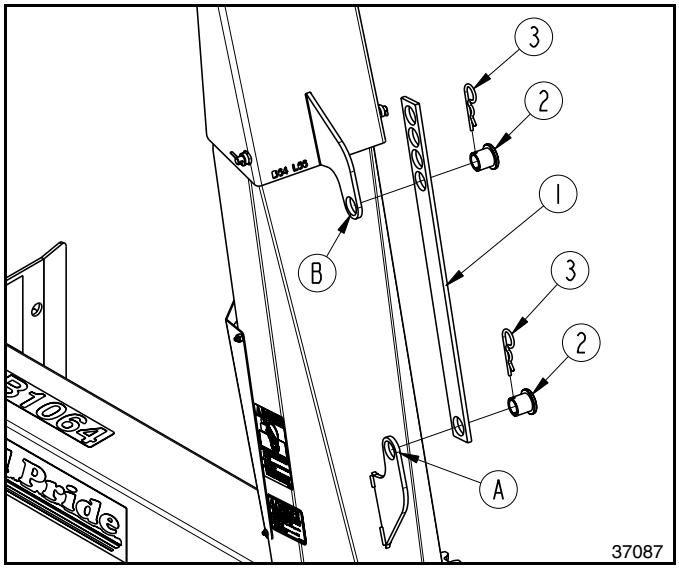


**Manual Deflector Assembly**
**Figure 2-7**

## Manual Deflector Assembly

***Refer to Figure 2-7:***

1. Attach lower single hole in adjustment deflector arm (#1) to lower discharge chute lug “A” with adjustment pin (#2). Secure adjustment pin with hairpin cotter (#3).
2. Attach one of the multiple upper holes to the upper deflector lug “B” with adjustment pin (#2). Secure adjustment pin with hairpin cotter (#3).

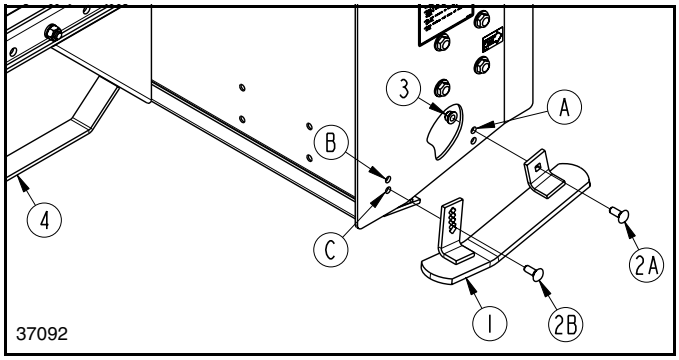


**Outer Skid Shoe Assembly**
**Figure 2-8**

## Skid Shoes, Outer

***Refer to Figure 2-8:***

1. Attach right-hand skid shoe (#1) to upper hole “A” with 3/8"-16 x 1" GR5 carriage bolt (#2A) and hex flange locknut (#3).
2. Attach right-hand skid shoe (#1) to hole “B” or “C” with 3/8"-16 x 1" GR5 carriage bolt (#2B) and hex flange locknut (#3).
3. Tighten locknuts to the correct torque.
4. Repeat steps 1 and 3 above for the left-hand skid shoe using the same mounting holes as before.

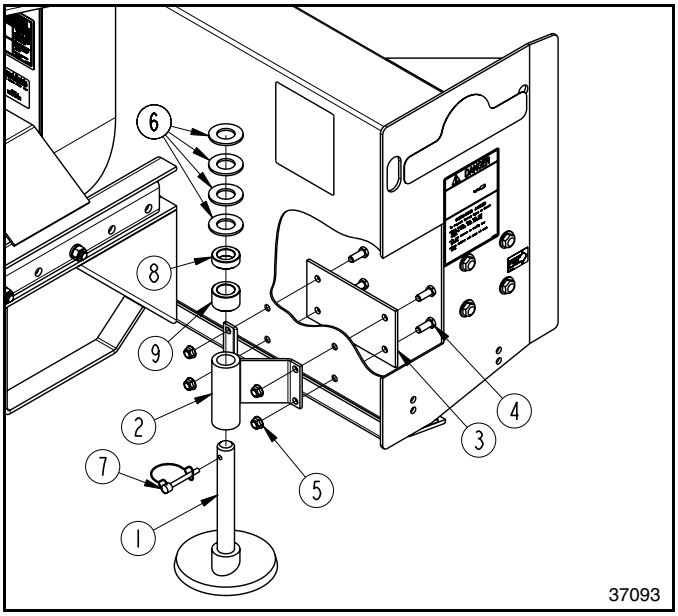


**Inner Skid Shoe Assembly**
**Figure 2-9**

## Skid Shoes, Inner

***Refer to Figure 2-9:***

1. Attach skid shoe mounts (#2) to both sides of the Snow Blower frame with 3/8"-16 x 1" GR5 bolts (#4), backing plates (#3), and hex flange locknuts (#5). Tighten locknuts to the correct torque.
2. Insert skid shoes (#1) into skid shoe mounts (#2).
3. Install 1" spacer (#9), 1/2" spacer (#8), and four flat washers (#6) over shaft of each skid shoe.
4. Secure skid shoes (#1) with 1/4" x 1 3/4" wire retaining pins (#7).
5. Make certain wire retainers are caught over end of pins to keep skid shoes from falling out.

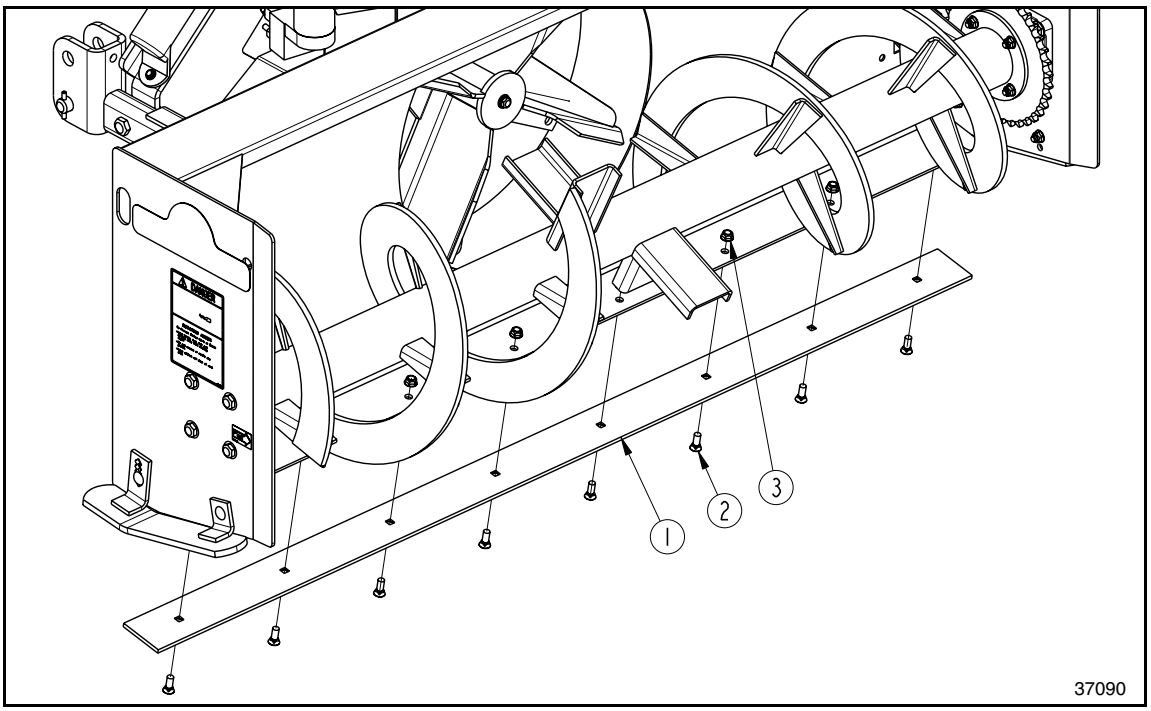


**Lower Wear Bar Assembly**
**Figure 2-10**

## Wear Bar, Lower

***Refer to Figure 2-10:***

1. Attach lower wear bar (#1) to bottom of Snow Blower frame with 3/8"-16 x 1" GR5 plow bolts (#2) and hex flange locknuts (#3).
2. Tighten locknut to the correct torque.

## Wear Bars, Outer

***Refer to Figure 2-11:***

1. Attach outer wear bars (#1) to the side panels by inserting 3/8"-16 x 1 1/4" GR5 carriage bolts (#2) through lower square holes in outer wear bars and lower mounting holes in side panels.
2. Secure bolts with hex flange locknuts (#3). Tighten locknuts to the correct torque.

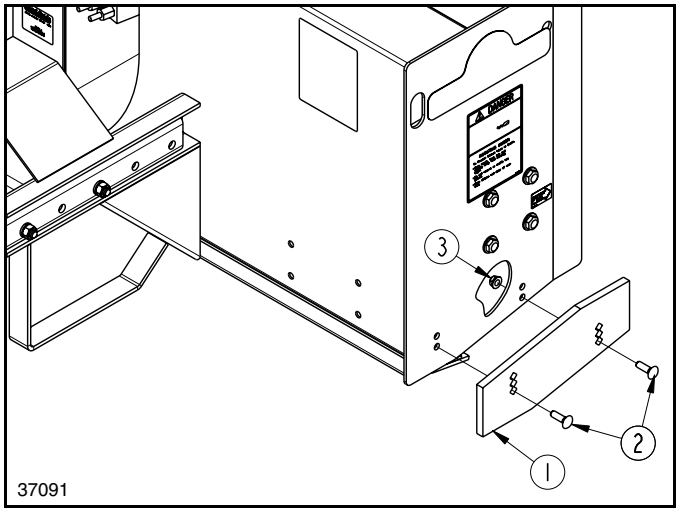


**Outer Wear Bar Assembly**
**Figure 2-11**

# 3-Point Hitch Assembly

## Driveline Shield

***Refer to Figure 2-12:***

1. Attach driveline shield (#2) to the underside of plate (#3) with 1/4"-20 x 5/8" GR5 bolts (#4) and flanged locknuts (#1). Tighten locknuts to the correct torque.

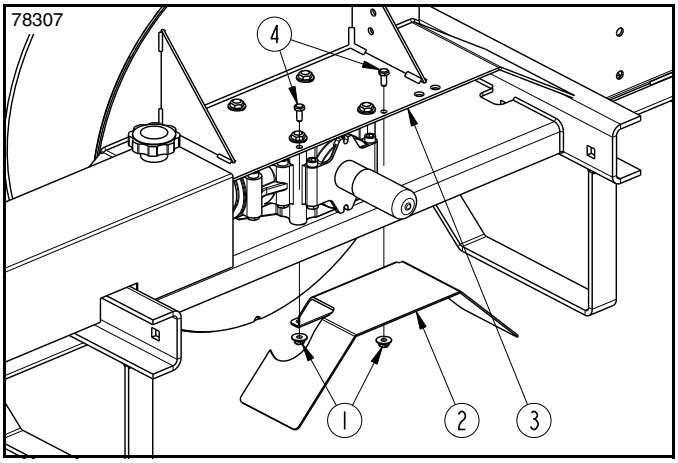


**Driveline Shield**
**Figure 2-12**

## *Lower 3-Point Telescoping Arms*

***Refer to Figure 2-13:***

1. Loosen knobs (#7) and remove shield (#8). Set shield aside for re-installation later.
2. Attach lower telescoping arms (#5) to the snow blower as shown with 1/2"-13 x 2 1/2" GR5 carriage bolts (#6), lock washers (#4), and nuts (#3). Tighten nuts to the correct torque.
3. Insert hitch pins (#1) in telescoping arms (#5) as shown and secure with linchpins (#2).
4. Slide slots in shield (#8) under knobs (#7) and hand tighten knobs against the shield.

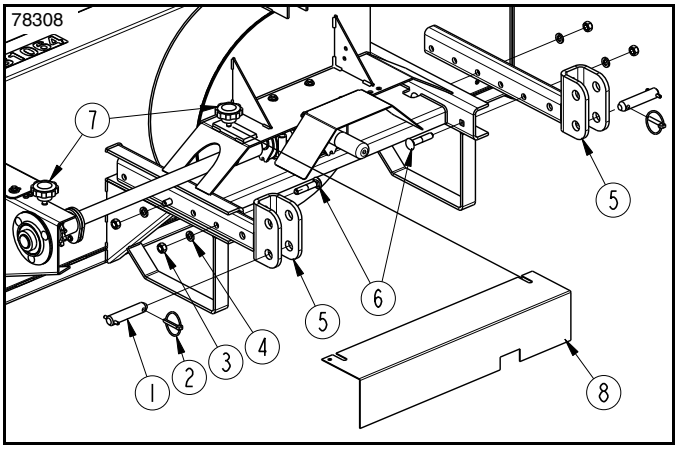


**Lower 3-point Telescoping Arms**
**Figure 2-13**

## A-Frame Hitch

***Refer to Figure 2-14:***

1. Attach upper tube (#10) to snow blower as shown with 5/8"-11 x 3 1/4" GR5 bolt (#9), flat washer (#11), and flange locknut (#12). Draw locknut up snug, do not tighten at this time.
2. Attach right-hand side bar (#4) to lower telescoping arm as shown with 5/8"-11 x 2 3/4" GR5 bolt (#1) and flange locknut (#2). Draw locknut up snug, do not tighten at this time.
3. Attach left-hand side bar (#5) to lower telescoping arm as shown with 5/8"-11 x 2 3/4" GR5 bolt (#1) and flange locknut (#2). Draw locknut up snug, do not tighten at this time.
4. Attach upper tube (#10) to side bars (#4 & #5) with 5/8"-11 x 3 1/2" GR5 bolt (#14) and locknut (#13).
5. Install bushing (#6) between side bars (#4 & #5) with 3/4"-10 x4" GR5 bolt (#8), flat washer (#7), and flanged locknut (#3). Draw locknut up snug, do not tighten at this time.
6. Tighten all locknuts (#2, #12, & #13) to the correct torques.

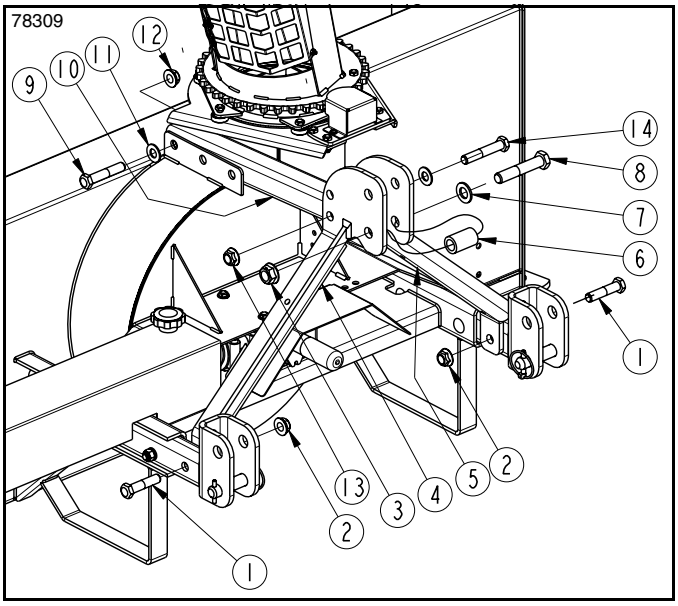


**A-Frame Hitch**
**Figure 2-14**

## Manual Storage Container

***Refer to Figure 2-15:***

1. Attach manual storage container (#5) with cap facing up using 1/4"-20 x 1 1/4" GR5 bolt (#4), flat washers (#2 & #3), and nylock nut (#1).
2. Tighten nylock nuts (#1). Be careful not to crack the container mounting bases.

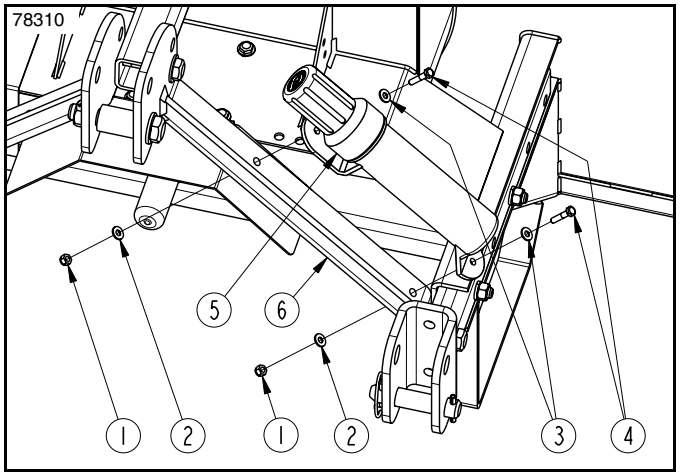


**Manual Storage Tube**
**Figure 2-15**

## Driveline Assembly

***Refer to Figure 2-16 on page 20:***

**IMPORTANT:** An additional driveline may be required if implement is attached to more than one tractor or if a Quick Hitch is used.

**IMPORTANT:** The driveline must be lubricated before putting it into service. Refer to **"Lubrication Points"** on page 44.

***Refer to Figure 3-1 on page 22:***

1. Remove rubber protective sleeve (#2) from gearbox input shaft and discard.
2. Slide shear bolt end of driveline (#4) onto gearbox input shaft until hole in driveline yoke aligns with groove in gearbox input shaft.
3. Insert 1/2"-13 x 3 1/2" GR2 bolt (#3) and secure with hex nut (#5) and jam nut (#6). Draw hex nut (#5) up snug (do not tighten). Tighten jam nut (#6) against hex nut (#5).
4. Push/pull on driveline yoke to be sure it is securely fastened to the gearbox input shaft.

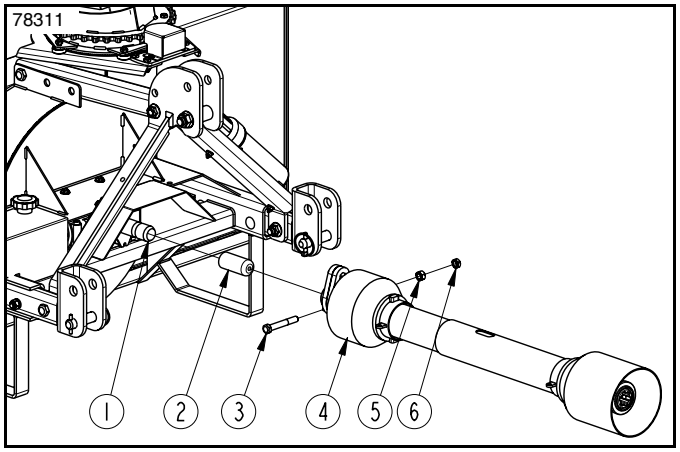


**Driveline Assembly**
**Figure 2-16**

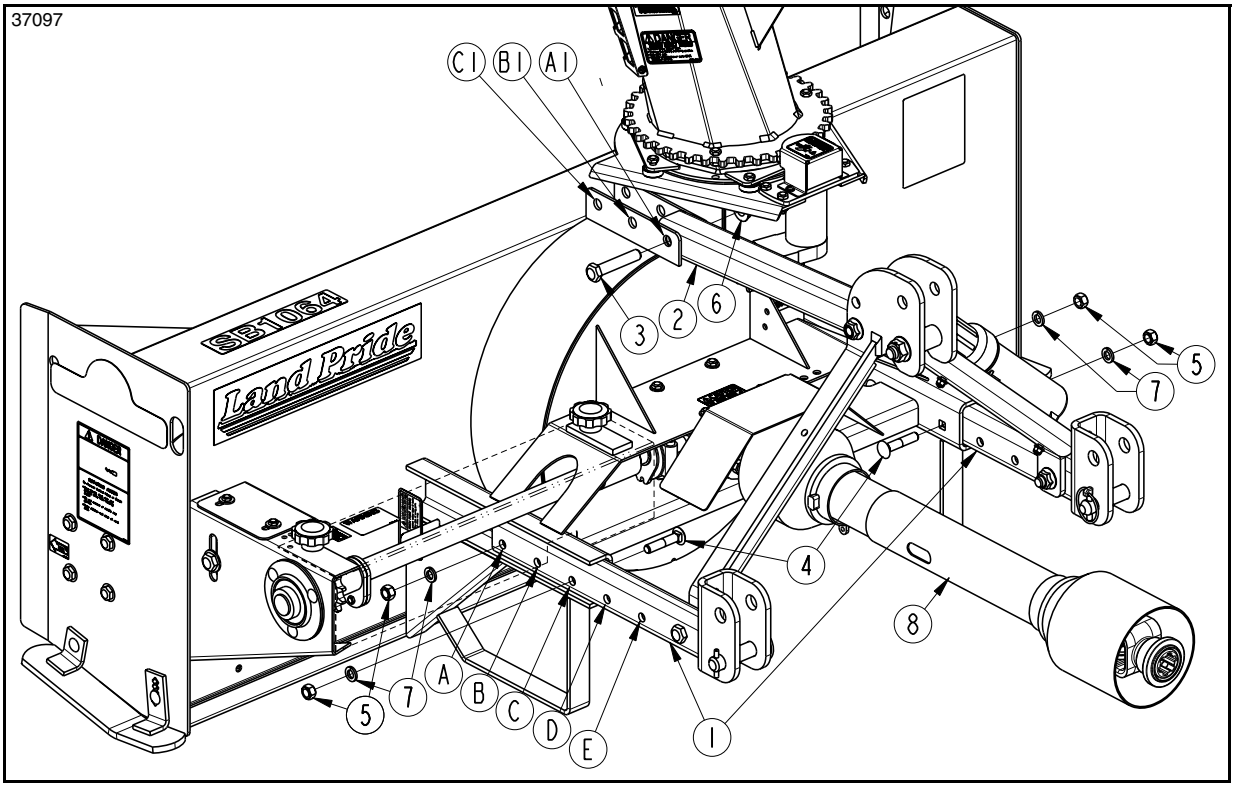


**3-Point Hitch Set-up (Shown with 3-Point Hitch Fully Extended)**
**Figure 2-17**

## Extend/Retract 3-Point Hitch Frame

***Refer to Figure 2-17:***

**NOTE:** The lower telescoping arms (#1) are assembled mounted in holes (C & E) (not shown) to decrease the force required to lift the snow blower and to minimize loss of steering control due to lack of weight on the front wheels.

If customer prefers, telescoping arms (#1) may be extended as shown to move the Snow Blower farther away from the tractor. Make sure the tractor's 3-point lift arms have enough force to easily raise the snow blower, and the front wheels have enough weight on them to maintain steering control.

**IMPORTANT:** If the hitch is not fully extended to holes (A & C), driveline (#8) will need to be shortened during initial hook-up to a standard three-point hitch.

**IMPORTANT:** Quick Hitch Usage: When using a Quick Hitch, telescoping arms (#1) must be fully retracted. An additional driveline may be required if the original driveline was shortened.

Adjust 3-point hitch frame (#1 & #2) as follows:

1. Remove nuts (#5), lock washers (#7), and carriage bolts (#4) from lower 3-point hitch frame (#1).
2. Remove hex flange nut (#6) and bolt (#3) from center telescoping arm (#2).
3. Extend or retract telescoping arms (#1) and center telescoping arm (#2) as follows:
   a. If mounting snowblower the furtherest distance away from the tractor, move arms (#1 & #2) to holes A, C, & A1.
   **Driveline (#8) should not require shortening.**
   b. If mounting snowblower 3" closer to the tractor, move arms (#1 & #2) to holes B, D, & B1.
   **Driveline (#8) will require shortening 3".**
   c. If mounting snowblower 6" closer to the tractor, move arms (#1 & #2) to holes C, E, & C1.
   **Driveline (#8) will require shortening 6".**
4. Reinsert 1/2"-13 x 2 1/2" GR5 carriage bolts (#4). Secure bolts with spring lock washers (#7) and hex nuts (#5). Draw hex nuts up snug, do not tighten at this time.
5. Reinsert 5/8"-11 x 3 1/4" GR5 hex bolt (#3) and secure bolt with flange locknut (#6). Tighten locknut to the correct torque.
6. Tighten nuts (#5) to the correct torque.
7. Continue with **"Section 3: Tractor Hook-up & Unhook"** on page 22.

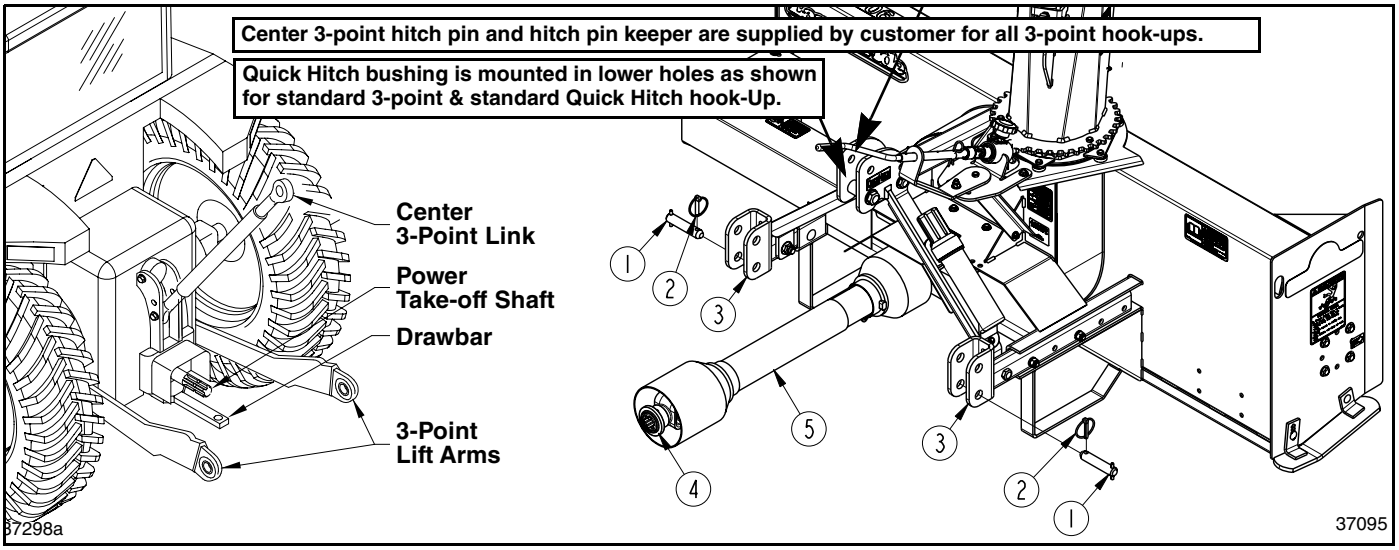


**Three Point Hook-up**
**Figure 3-1**

## Three Point Hook-up

***Refer to Figure 3-1:***

**DANGER**

*To avoid serious injury or death:*

*A crushing hazard exists while Connecting and disconnecting the implement. Keep people and animals away while backing-up to the implement or pulling away from the implement. Do not operate hydraulic controls while a person or animal is directly behind the power machine or near the implement.*

**WARNING**

*To avoid serious injury or death:*

*Always follow "Tractor Shutdown Procedure" provided in this manual before dismounting the tractor.*

**NOTE:** Review **"Hitch Pin Locations"** on page 29 before hooking-up the Snow Blower.

**NOTE:** Land Pride's Quick Hitch can be attached to the tractor to provide quick and easy 3-point hook-up and detachment. See your nearest Land Pride dealer to purchase a Quick Hitch.

**IMPORTANT:** Quick Hitch Usage: When using a Quick Hitch, telescoping arms (#3) must be fully retracted. An additional driveline may be required if the original driveline was shortened.

**IMPORTANT:** The tractor's lower 3-point arms must be stabilized to prevent side-to-side movement. Most tractors have sway blocks or adjustable chains for this purpose.

The SB10 & SB15 Series require a 3-point Cat. I hitch. The SB25 Series will receive Cat. I & II 3-point hitches. The lower 3-point arms must be stabilized to prevent side-to-side movement. Most tractors have sway blocks or adjustable chains for this purpose.

1. Extend or retract 3-point hitch to position the Snow Blower farther from or closer to the tractor. Refer to **"Extend/Retract 3-Point Hitch Frame"** on page 21 for detailed instructions.
2. Quick Hitch bushing is mounted in the lower holes on the center clevis as shown when making a standard 3-point hooking-up or standard Quick Hitch hook-up. Review **"Hitch Pin Locations"** on page 29 before hooking-up to tractor.
3. Slowly back tractor to the Snow Blower while using tractor's 3-point hydraulic control lever to align lower 3-point lift arms with hitch pins (#1).
4. Place gear selector in park or in neutral with park brake set, shut engine off, and remove switch key before dismounting tractor.
5. Attach lower 3-point lift arms to clevises (#9) with hitch pins (#1). Secure hitch pins with linchpins (#5).
6. Connect top center link hitch hole to upper clevis hitch holes with hitch pin and hitch pin keeper. (Hitch pin and keeper are supplied by customer.

## Driveline Hook-Up

***Refer to Figure 3-1:***

**DANGER**

*To avoid serious injury or death:*

- *Do not engage power take-off while connecting or disconnecting the driveline, or while someone is standing near the driveline. A person's body and/or clothing can become entangled in the driveline.*
- *All guards and shields must be installed and in good working condition while operating the implement.*
- *Do not use a power take-off adapter. The adapter will increase strain on the tractor's power take-off shaft causing possible damage to shaft and driveline. It will also defeat the purpose of the tractor's power take-off shield.*

## ⚠ WARNING

*To avoid serious injury or death:*

- *Always shut tractor down according to "Tractor Shutdown Procedure" provided in this manual before allowing anyone including the operator to hook up or unhook the implement.*
- *Check driveline when lowering implement to make sure it does not interfere with the tractor drawbar at maximum depth. If needed, shut tractor off and move or remove drawbar to prevent driveline damage.*

**IMPORTANT:** Before modifying driveline length, please review **"Extend/Retract 3-Point Hitch Frame"** on page 21.

**IMPORTANT:** Quick Hitch Usage: When using a Quick Hitch, the Snow Blower telescoping 3-point arms must be fully retracted. An additional Quick Hitch driveline may be required if the original driveline has been shortened.

**IMPORTANT:** An additional driveline may also be required if the Snow Blower is attached to more than one tractor.

**IMPORTANT:** Check driveline collapsible and maximum length before completing **"Driveline Hook-Up"** instructions. Structural damage to the tractor and implement can occur if these checks are not made. Refer to **"Check Driveline Collapsible Length"** on page 26 and **"Driveline Maximum Allowable Length"** on page 27.

**IMPORTANT:** The drivelines must be lubricated before putting them into service. Refer to **"Lubrication Points"** on page 43.

Driveline (#7) fastens to the tractor's power take-off shaft with pull collar (#8).

1. If driveline collapsible length has not been checked, go to **"Check Driveline Collapsible Length"** on page 26. Otherwise, continue with step 2 below.
2. Park tractor and Snow Blower on a level surface.
3. Shut tractor down before dismounting. Refer to **"Tractor Shutdown Procedure"** on page 35.
4. If tractor drawbar interferes with the driveline during hook-up, disconnect driveline and move drawbar forward, to the side, or remove.
5. Apply a light coat of grease on the tractor's power take-off shaft.
6. Pull back on driveline yoke collar and push driveline yoke onto the tractor power take-off shaft. If driveline is too long to push yoke onto the tractor power take-off shaft, skip to **"Check Driveline Collapsible Length"** on page 26.
7. Release pull collar and continue to push driveline yoke forward until pull collar locks in place.
8. Move driveline yoke back and forth several times to make sure yoke is locked in place.

## Hydraulic Hook-up

## ⚠ WARNING

*To avoid serious injury or death:*

*Hydraulic fluid under high pressure will penetrate the skin or eyes causing serious injury. Wear protective gloves and safety glasses or goggles when working with hydraulic systems. Use a piece of cardboard or wood, rather than hands, when searching for leaks. If an accident occurs, seek immediate emergency medical care or gangrene may result. DO NOT DELAY.*

Two Snow Blower options require hydraulic hose hook-ups. They are hydraulic motor for chute rotation and hydraulic cylinder for deflector angling. Be sure tractor reservoir is filled properly before operating hydraulic motor and/or hydraulic cylinder. If tractor reservoir is low on hydraulic fluid, there is a chance of drawing air into the system causing jerky or uneven movements.

### Hydraulic Motor For Chute Rotation

1. Locate hydraulic motor hoses and connect quick disconnect couplings to a single duplex outlet on the tractor. This is best if connected to the control lever closest to the operator.
2. Set tractor control lever in the non-float position.
3. Cycle hydraulic system by rotating chute until it points to the left at 90° to the direction of travel and then rotating chute a 180° in the opposite direction. Do this several times to purge hydraulic motor of air.
4. Switch quick disconnect couplings at the duplex outlet if chute does not rotate in the direction desired. It is best if chute rotates to discharge to the right when pushing control lever on the tractor forward.

### Hydraulic Cylinder For Deflector Adjustment

1. Locate hydraulic cylinder hoses and connect quick disconnect couplings to a single duplex outlet on the tractor. This is best if connected to the control lever next to the hydraulic motor control lever.
2. Set tractor control lever in the non-float position.

**NOTE:** It is not necessary to purge the hydraulic system of trapped air if operation is sluggish. The cylinder is double acting and will self purge itself of air as hydraulic oil cycles back and forth through the cylinder several times.

3. Cycle hydraulic system by extending and retracting the cylinder several times to purge hydraulic cylinder of air.
4. Switch quick disconnect couplings at the duplex outlet if deflector does not angle in the direction desired. It is best if deflector raises when pushing control lever on the tractor forward.

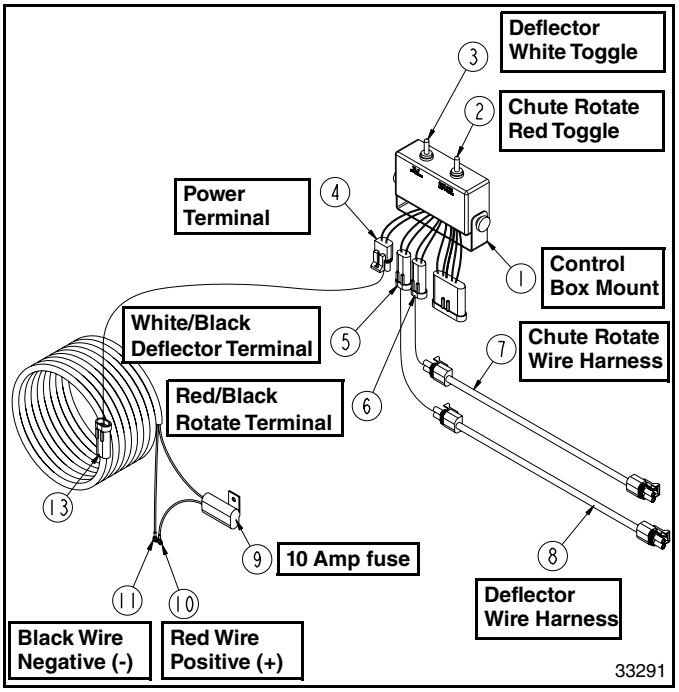


**Electrical Hook-up**
**Figure 3-2**

## Electrical Hook-up

***Refer to Figure 3-2:***

Two Snow Blower options require electrical hook-up. They are electric motor for chute rotation and electric actuator for operating the deflector angling.

1. Find a suitable location to mount control box (#1) on the tractor. Usually this would be close to the operator's right-hand side on the tractor fender or fender console. Exact location should be convenient for operating toggle switches (#2 & #3).
2. Route power cable eyelets (#10 & #11) to tractor power source or circuit breaker panel. A 10 Amp or larger fuse/circuit breaker source should be used.
   a. Connect red lead (#10) to a 12 VDC positive (+) power source.
   b. Connect black lead (#11) to a negative (-) 12 VDC power source.
3. Connect power cable terminal (#13) to control box terminal (#4).
4. Connect electric motor (chute rotation) and electric actuator (deflector angle) to the control box as follows:

   **Electric Motor:**

   Plug chute rotation wire harness (#7) to the red & black terminal (#6). Verify opposite end of wiring harness is plugged to the electric motor.

   **Electric Actuator:**

   Plug deflector wire harness (#8) to the white & black terminal (#5). Verify opposite end of wiring harness is plugged to the electric actuator.
5. Check routing of wire harness (#7 & #8) to make certain they will not become pinched or pulled apart. Tie harness to Snow Blower and tractor as needed with cable ties. Cable ties are supplied by customer.

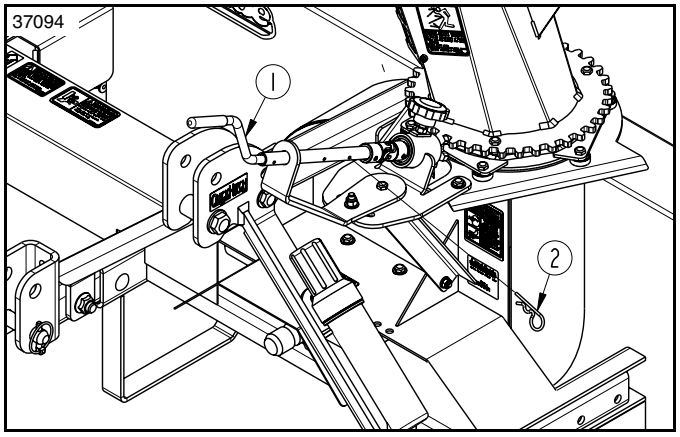


**Manual Chute Rotation Handle**
**Figure 3-3**

## Adjust Chute Rotation Handle

***Refer to Figure 3-3:***

**CAUTION**

*To avoid minor or moderate injury:*

*If adjusted too long, the rotational handle can come in contact with the tractor or create a pinch point between the tractor and Snow Blower.*

1. Remove hairpin cotter (#2) and move rotation handle (#1) in or out as needed to keep rotation handle from making contact with tractor or creating a pinch point between tractor and Snow Blower.
2. Be sure to check hand crank length when hooking up to the Snow Blower. Take measurement with Snow Blower raised fully up.
3. Replace hairpin cotter (#2).
4. Return to the tractor. Slowly and carefully raise and lower Snow Blower to ensure drawbar, tractor tires, and other equipment on the tractor do not come in contact with the Snow Blower. If necessary, move or remove tractor drawbar.

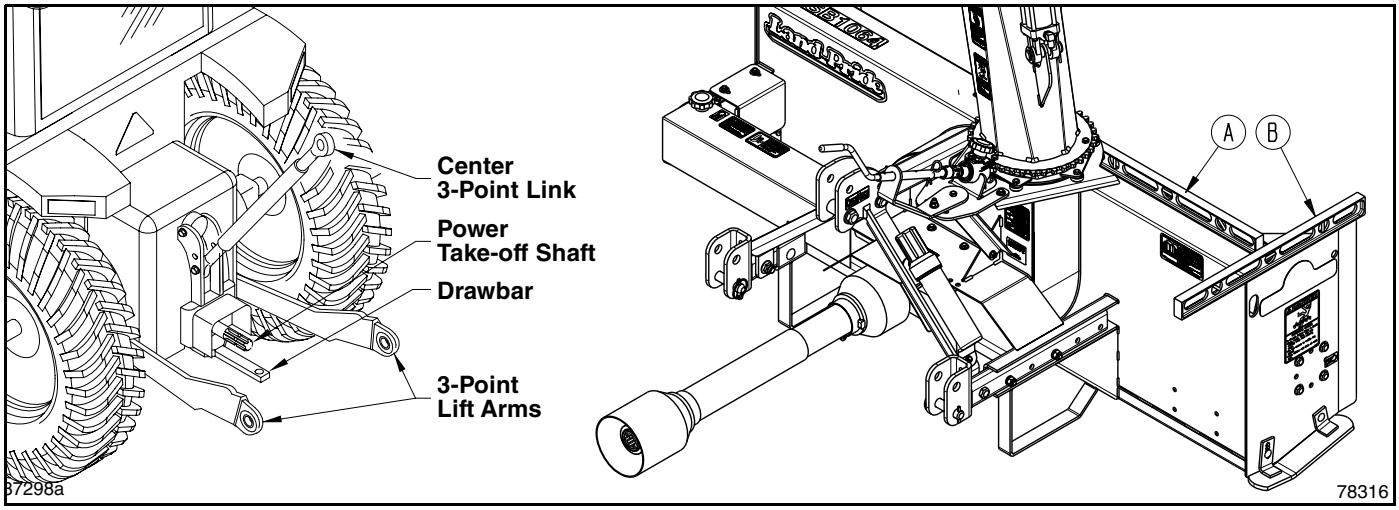


**Driveline Installation (Shown with 3-Point Hitch Fully Extended)**
**Figure 3-4**

## Level Snow Blower

***Refer to Figure 3-4:***

**KH15 Hitch Hook-up:** Before hooking up to the snow blower, level the KH15 Hitch using the instructions provided in the KH15 Hitch Operator's Manual #320-135MK. No other leveling instructions are required when using the KK15 Hitch.

**3-Point Hook-up:** Level snow blower by adjusting the tractor's 3-point per the instructions provided below:

1. Park tractor and implement on solid, level ground. Lower implement until it is 1" off the ground.
2. Without changing 3-point lift height, shut tractor down before dismounting. Refer to **"Tractor Shutdown Procedure"** on page 35.
3. Place a level across the top of the housing as shown in position "A". Manually adjust one of the lower lift arms up or down to level the Snow Blower from left to right.
4. Rotate level to position "B" on an end plate and manually adjust length of top center link to level the Snow Blower from front to back.
5. Continue with **"Check 3-Point Driveline Interference"** on page 25.

## Check 3-Point Driveline Interference

***Refer to Figure 3-5:***

### ⚠ WARNING

*To avoid serious injury or death:*

*A rotating driveline must not exceed an angle of 25 degrees up or down, and never engage a driveline while at an angle exceeding 25 degrees up or down. The driveline can break and send flying projectiles.*

1. Start tractor, raise implement fully up, and back implement over the support blocks used to **"Check Driveline Collapsible Length"** on page 26,

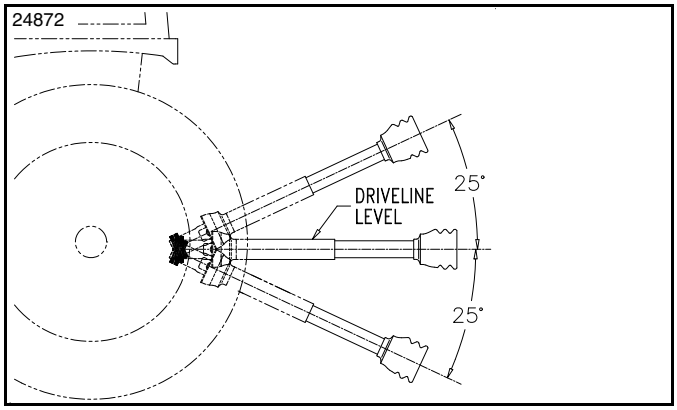


**Maximum Driveline Movement During Operation**
**Figure 3-5**

2. Without changing 3-point lift height, shut tractor down before dismounting. Refer to **"Tractor Shutdown Procedure"** on page 35.
3. Check to make sure driveline does not exceed any of the limits listed below:
   - Driveline does not exceed maximum allowable length recorded in step 7 under **"Check Driveline Collapsible Length"** on page 26.
   - Driveline angle does not exceed 25° above horizontal or 25° below horizontal.
4. If any limit was exceeded, adjust tractor 3-point lift limiter to the height that will keep the driveline within the recommended limit listed above.
5. If needed, repeat steps 1-4 until all limits mentioned in step 3 are maintained.
6. Start tractor, raise implement slightly, and drive forward enough to clear support blocks.
7. Lower implement to ground and shut tractor down before dismounting. Refer to **"Tractor Shutdown Procedure"** on page 35.

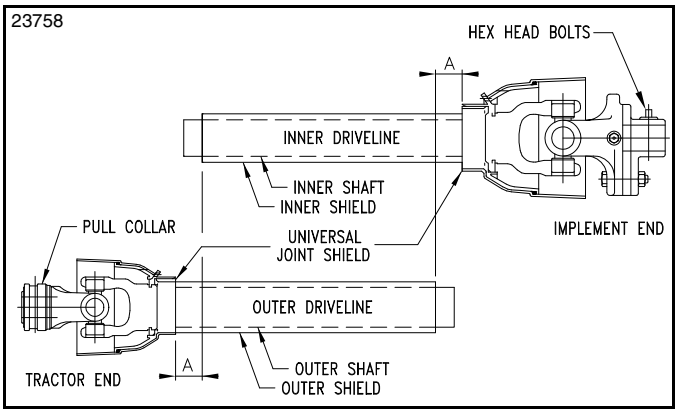


**Check Driveline Minimum Length**
**Figure 3-6**

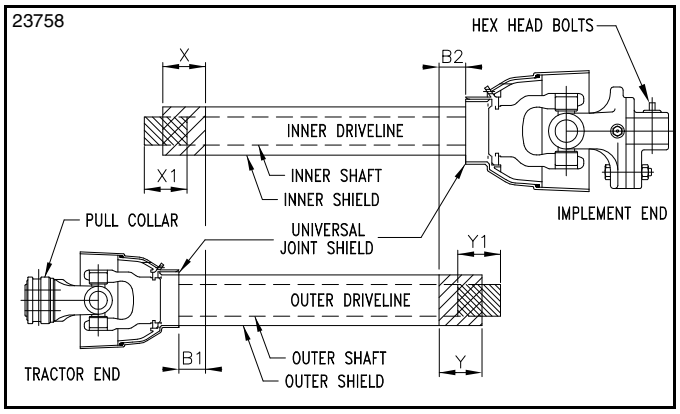


**Shorten Driveline Length**
**Figure 3-7**

## Check Driveline Collapsible Length

### DANGER

*To avoid serious injury or death:*

*Always secure equipment with solid, non-concrete supports before working under it. Never go under equipment supported by concrete blocks or hydraulics. Concrete can break, hydraulic lines can burst, and/or hydraulic controls can be actuated even when power to the hydraulics is off.*

**IMPORTANT:** A driveline that is too long can bottom out causing structural damage to the tractor and implement. Always check driveline minimum length during initial setup, and when connecting to a different tractor. More than one driveline may be required to fit all applications.

1. With driveline attached only to the 3-point implement, remove outer driveline (tractor end) from inner driveline to separate the two profiles.
2. Park tractor and implement on a level surface.
3. Raise implement until the gearbox input shaft is level and in-line with the tractor power take-off shaft.
4. Securely block implement at this height to keep unit from lowering.
5. With implement resting on the support blocks, shutdown the tractor using **"Tractor Shutdown Procedure"** on page 35.
6. Attach outer driveline to the tractor's power take-off shaft. Refer to **"Driveline Hook-Up"** on page 22.
7. Hold inner and outer drivelines parallel to each other as shown in Figure 3-6. Measure dimension "A".
   - If "A" is less than 1", continue with step 8.
   - If "A" is greater than or equal to 1", skip to **"Driveline Maximum Allowable Length"** on page 27.

***Refer to Figure 3-7:***

8. Shorten driveline as follows:
   a. Measure 1" (**"B1"** dimension) back from outer driveline shield and make a mark at this location on the inner driveline shield.
   b. Measure 1" (**"B2"** dimension) back from the inner driveline shield and make a mark at this location on the outer driveline shield.
9. Remove outer driveline from the tractor's power take-off shaft and inner driveline from the implement's gearbox shaft.
10. Cut off non-yoke end of inner driveline as follows:
    a. Measure from end of inner shield to scribed mark (**"X"** dimension) and record.
    b. Cut off inner shield at the mark. Cut same amount off the inner shaft (**"X1"** dimension).
11. Cut off non-yoke end of outer driveline as follows:
    a. Measure from end of outer shield to scribed mark (**"Y"** dimension) and record.
    b. Cut off outer shield at the mark. Cut same amount off the outer shaft (**"Y1"** dimension).
12. Remove all burrs and cuttings.
13. Continue with **"Driveline Maximum Allowable Length"** on page 27.

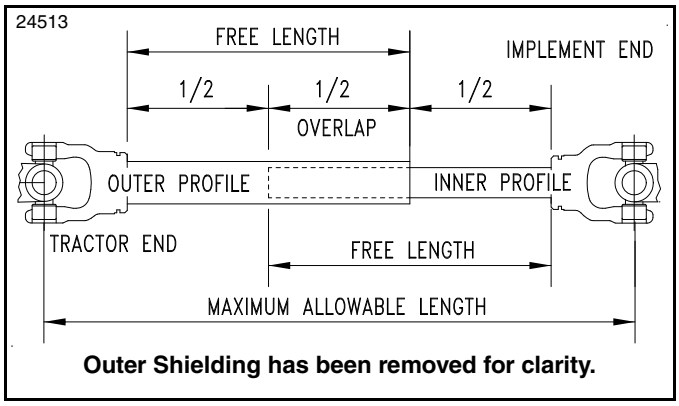


**Driveline Maximum Length**
**Figure 3-8**

## Driveline Maximum Allowable Length

***Refer to Figure 3-8:***

Driveline maximum length must, when fully extended, have a minimum overlap of profile tubes by not less than 1/2 the free length with both inner and outer profile tubes being of equal length.

1. Make sure **"Check Driveline Collapsible Length"** on page 26 has been completed before continuing with instructions below.
2. Unhook driveline profiles from the tractor and implement.
3. If profiles are assembled together, pull outer and inner drivelines profiles apart.
4. Measure and record "Free Length" of inner and outer profiles as shown in Figure 3-8.

**IMPORTANT:** The driveline must be lubricated before putting it into service. Refer to **"Lubrication Points"** on page 43.

5. Lubricate driveline u-joints, bearings, and profiles. Refer to **"Lubrication Points"** on page 43.
6. Assemble driveline halves together until profile tubes have exactly 1/2 profile overlap as shown.
7. Measure driveline "Maximum Allowable Length" and record that length here _____.
8. Start tractor, raise implement slightly, and drive forward enough to clear support blocks.
9. Lower implement to ground and shut tractor down before dismounting. Refer to **"Tractor Shutdown Procedure"** on page 35.
10. Continue with **"Driveline Hook-Up"** on page 22.

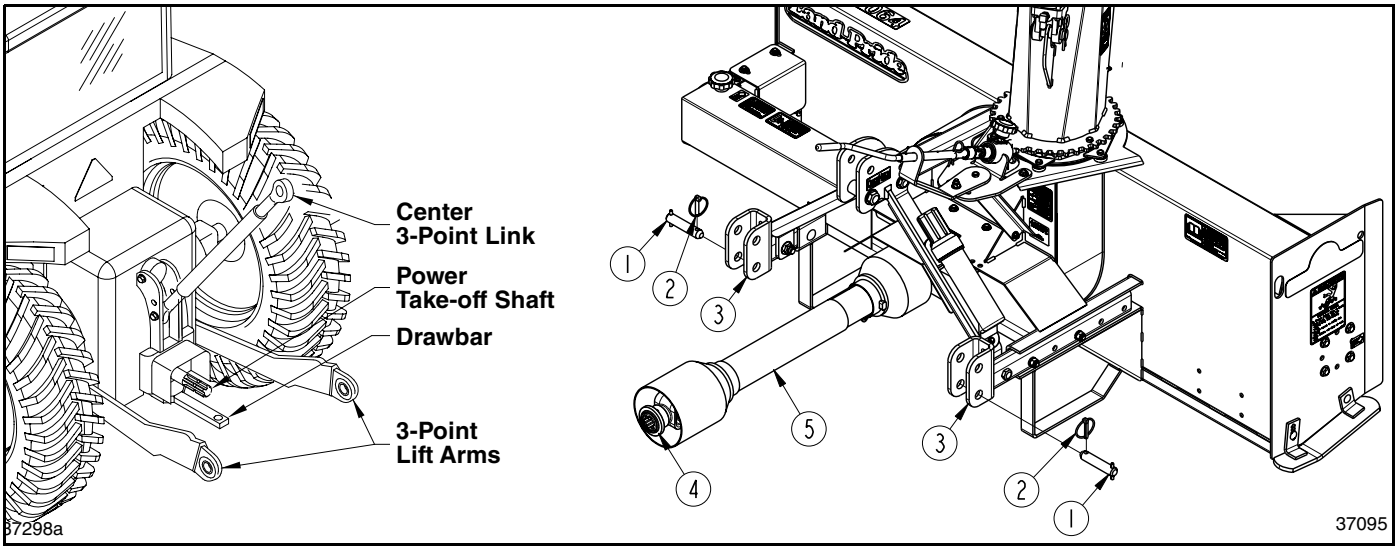


**Three Point Hook-up**
**Figure 3-9**

## Unhook Snow Blower

The following steps should be taken when preparing to store the Snow Blower or to unhook it from the tractor.

1. See **"Long-Term Storage"** on page 42 before parking Snow Blower for a long period.
2. Disengage power take-off, park on a level solid surface, and lower Snow Blower to ground level.
3. Place gear selector in park or in neutral with park brake set, shut engine off, remove switch key, and wait for power take-off to stop before dismounting tractor.
4. **Hydraulic Options:**
   a. With tractor shut off, move hydraulic control levers back and forth several times to relieve all hydraulic pressure in hydraulic hoses.
   b. Disconnect hydraulic hoses from tractor duplex outlets.
   c. Wrap hydraulic hoses around Snow Blower hitch frame for storage and to keep dirt away from quick disconnect couplings.

***Refer to Figure 3-2 on page 24:***

5. **Electrical Options:**
   a. Disconnect electric motor (chute rotation) wiring harness (#7) from control box (#1). Coil harness up and tie to Snow Blower hitch frame.
   b. Disconnect electric actuator (deflector wiring harness (#8)) from control box (#1). Coil harness up and tie to Snow Blower hitch frame.
   c. Disconnect black negative (-) wire lead (#11) from power source.
   d. Disconnect red positive (+) lead (#10) from power source.
   e. Remove control box (#1) from tractor, wrap wiring harness (#13) up in a coil and tie coils together to keep coils from unwrapping.
   f. Store wiring harness (#13) and control box (#1) in a dry location.

***Refer to Figure 3-9:***

6. Pull back on driveline pull collar (#4) and hold while pulling driveline yoke from tractor power take-off shaft.
7. Remove top center hitch pin keeper and hitch pin. If provided, place center 3-point link in tractor's holding clip.
8. Remove linchpins (#2) and hitch pins (#1) from lower 3-point lift arms and clevis (#3).
9. Drive tractor forward several feet. Place gear selector in park or set park brake, shut tractor engine off, remove switch key, and dismount tractor.
10. Reinstall hitch pins (#1) and linchpins (#2) in the clevis (#3) for safe keeping.
11. Collapse driveline (#5) by pushing tractor end of driveline towards the Snow Blower.
12. Support collapsed driveline off the ground to keep dirt away from yoke pull collar and bearings.

## Hitch Pin Locations

The lower 3-point hitch pins and upper center bolt-on bushing can be arranged in the A-frame hitch three different ways depending on user preference.

### Standard 3-Point & Quick Hitch Hook-up

***Refer to Figure 4-1:***

This is the most commonly used arrangement.

1. The lower 3-point hitch pins are located in the bottom clevis holes.
2. Bushings, if need, can be added to the lower 3-point hitch pins when using a Quick Hitch. (Lower 3-point bushings are supplied by the customer.)
3. The tractor's center 3-point link is attached to the upper center hitch holes with a hitch pin and secured with a hitch pin keeper. (Hitch pin and hitch pin keeper are supplied by the customer.)
4. The center bushing is for Quick Hitch attachment and is bolted in the lower center hitch holes.

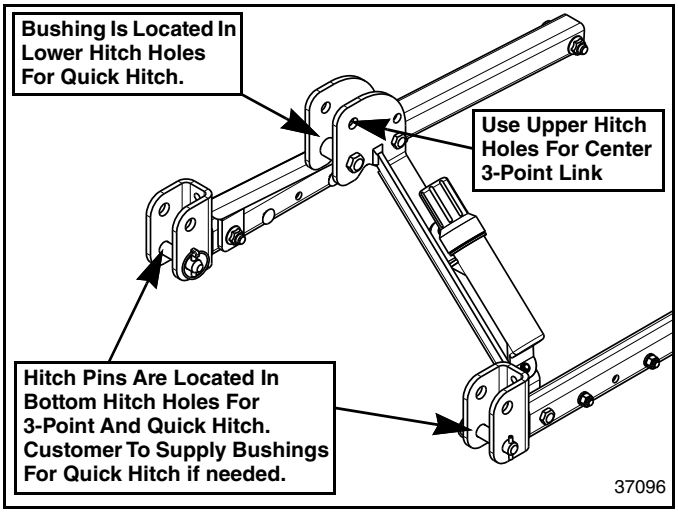


**Standard 3-Point & Quick Hitch Hook-up**
**Figure 4-1**

### Special 3-Point Hook-up

***Refer to Figure 4-2:***

This arrangement is used when the tractor's lower 3-point arms will not go low enough to remove snow close to the ground.

1. The lower 3-point hitch pins are located in the upper clevis holes.
2. The tractor's center 3-point link is attached to the upper center hitch holes with a hitch pin and secured with a hitch pin keeper. (Hitch pin and hitch pin keeper are supplied by the customer.)

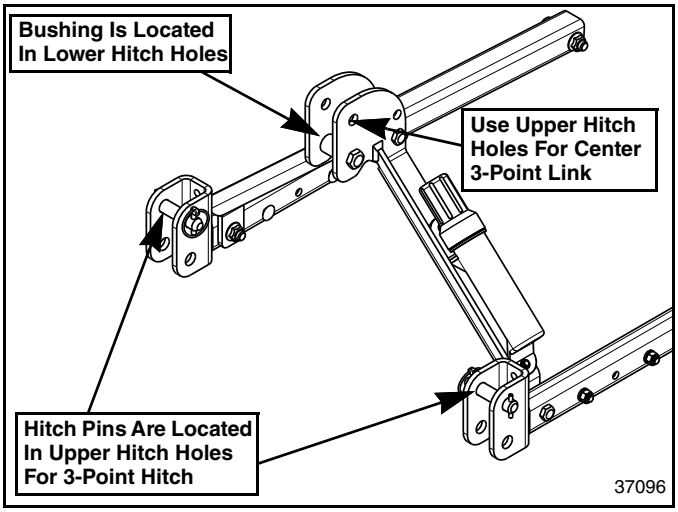


**Special 3-Point Hitch Hook-up**
**Figure 4-2**

### Special Quick Hitch Hook-up

***Refer to Figure 4-3:***

This arrangement is used with a Quick Hitch attached to the tractor and the tractor's lower 3-point arms will not go low enough to remove snow close to the ground.

1. The lower 3-point hitch pins are located in the upper clevis holes.
2. Bushings can be added to the lower 3-point hitch pins when needed for the Quick Hitch. (Lower 3-point bushings are supplied by customer.)
3. The center bushing for Quick Hitch attachment is bolted to the upper center hitch holes.

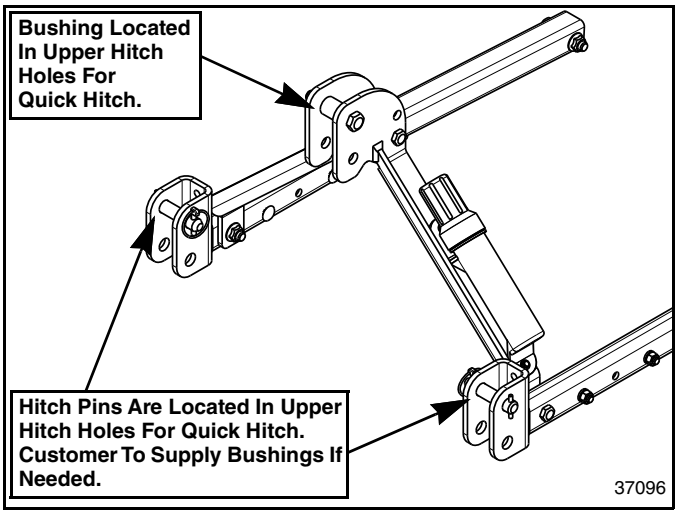


**Special Quick Hitch Hook-up**
**Figure 4-3**

## Chute Rotation

### WARNING

*To avoid serious injury or death:*

- *Never operate Snow Blower if its discharge chute can be rotated to throw snow toward the operator. If the chute can be rotated toward the operator, shutdown the Snow Blower and adjust or repair chute rotation stop before putting the Snow Blower back into service.*
- *Keep people and animals away while operating the Snow Blower. Never throw snow toward people, animals, or operator. The Snow Blower is capable of picking up solid objects and discharging them at high speeds.*

**IMPORTANT:** Never operate Snow Blower with chute throwing snow toward property such as vehicles, buildings, trailers etc. that can be scratched, dented or broken by thrown projectiles.

**IMPORTANT: Do not** operate a Snow Blower that throws snow towards the tractor and/or operator. Investigate the cause and make necessary repairs before putting unit back into service. Especially investigate chute rotation stop (#9) and stop bolts (#8) shown in Figure 1-2 on page 13.

### Manual Rotation

1. Disengage power take-off, place gear selector in park or in neutral with park brake set, shut engine off, remove switch key, and wait for power take-off to stop before dismounting tractor.
2. Turn rotation handle (#1) in Figure 3-3 on page 24 to rotate chute in the direction snow is to be thrown.
3. Resume snow blowing once new chute angle is set.

### Electric Motor Rotation

***Refer to Figure 3-2 on page 24:***

1. Place gear selector in park or in neutral with park brake set before adjusting discharge chute.
2. Push and hold control box red toggle switch to rotate chute to the left, and pull and hold switch to rotate chute to the right. Release toggle switch when desired angle is reached.
3. Resume snow blowing once new chute angle is set.

### Hydraulic Motor Rotation

**IMPORTANT:** Adjustment screws on hydraulic motor are preset at the factory. Do not change factory settings. Changing factory settings can cause structural damage to the Snow Blower.

1. Place gear selector in park or in neutral with park brake set before adjusting discharge chute.
2. Push on hydraulic control lever to rotate chute to the left and pull to rotate chute to the right.
3. Resume snow blowing once new chute angle is set.

## Deflector

The deflector can be tilted up or down to direct blown snow up close or far away. This is accomplished in one of three ways depending upon which option was purchased.

### Manual Adjusting

***Refer to Figure 4-4:***

1. Disengage power take-off, place gear selector in park or in neutral with park brake set, shut engine off, remove switch key, and wait for power take-off to stop before dismounting tractor.
2. Pull hair pin cotter (#4) and adjustment pin (#3).
3. Readjust angle of deflector (#2) to suit by realigning one of the 4 holes (#5) with hole in deflector (#2).
4. Insert adjustment pin (#3) and secure with hairpin cotter (#4).
5. Resume snow blowing once new angle is set.

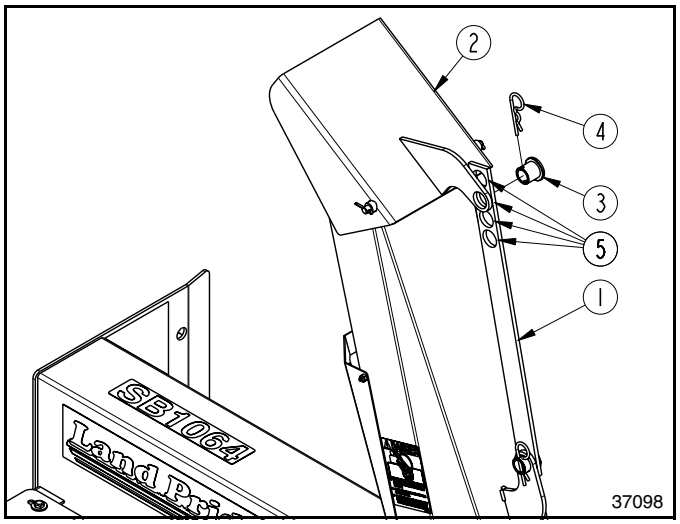


**Manual Deflector Angle Adjustment**
**Figure 4-4**

### Electric Actuator Adjusting

***Refer to Figure 3-2 on page 24:***

1. Place gear selector in park or in neutral with park brake set before adjusting deflector.
2. Push and hold control box white toggle switch to angle deflector up. Pull and hold toggle switch to angle deflector down. Release toggle switch when desired angle is reached.
3. Resume snow blowing once new deflector angle is set.

### Hydraulic Cylinder Adjusting

1. Place gear selector in park or in neutral with park brake set before adjusting deflector angle.
2. Push on hydraulic control lever to angle deflector up and pull on hydraulic control lever to angle deflector down.
3. Resume snow blowing once new angle is set.

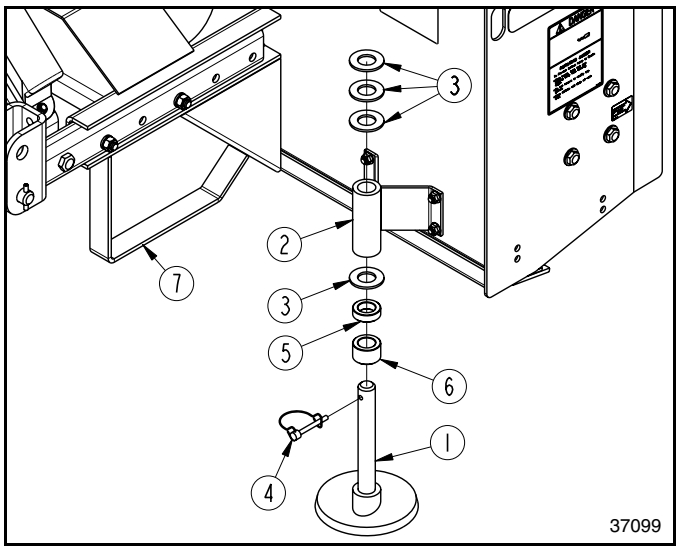


**Inner Skid Shoe Adjustment**
**Figure 4-5**

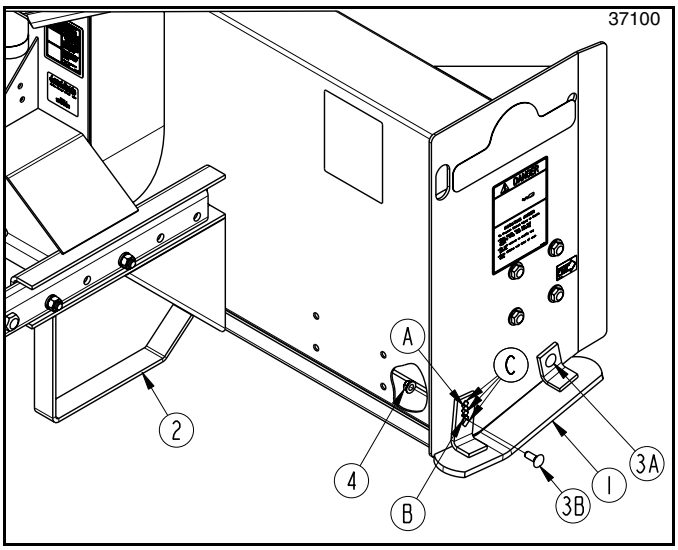


**Outer Skid Shoe Adjustment**
**Figure 4-6**

## Inner Skid Shoes

***Refer to Figure 4-5:***

1. Disengage power take-off and park on level ground.
2. Place gear selector in park or in neutral with park brake set.
3. Operate 3-point lift lever to raise Snow Blower off the ground high enough to remove skid shoes (#1) from skid shoe mounts (#2).
4. Shut tractor engine off and remove switch key. Make sure power take-off has stopped before dismounting tractor.
5. To keep Snow Blower from dropping while adjusting skid shoes (#1), place non-concrete support blocks under Snow Blower support rests (#7).
6. Remove wire retaining pin (#4) and all spacers above skid shoe mount (#2).
7. Pull skid shoes (#1) out of skid shoe mount (#2).
8. Raise or lower Snow Blower as follows:
   - To raise the Snow Blower, add an equal amount of spacers (#3, #5, and/or #6) between skid shoes (#1) and skid shoe mounts (#2).
   - To lower the Snow Blower, remove an equal amount of spacers (#3, #5, and/or #6) from between skid shoes (#1) and skid shoe mounts (#2).
9. Reinsert skid shoes (#1) into skid shoe mounts (#2).
10. Store unused spacers on top of skid shoe mounts. (Three #3 spacers shown on top in illustration)
11. Secure spacers and skid shoes with wire retaining pin (#4). Make sure wire retainer is caught over end of pin.

## Outer Skid Shoes

***Refer to Figure 4-6:***

1. Disengage power take-off and park on level ground.
2. Place gear selector in park or in neutral with park brake set.
3. Operate 3-point lift lever to raise Snow Blower off the ground high enough to adjust skid shoes (#1).
4. Shut tractor engine off and remove switch key. Make sure power take-off has stopped before dismounting tractor.
5. To keep Snow Blower from dropping while adjusting skid shoes (#1), place non-concrete support blocks under Snow Blower support rests (#2).
6. Loosen carriage bolt (#3A).
7. Remove carriage bolt (#3B).
8. Raise or lower the Snow Blower as follows:
   - To raise the Snow Blower, rotate skid shoes (#1) down.
   - To lower the Snow Blower, rotate skid shoes (#1) up.
9. Reinsert carriage bolt (#3A) into one of 5 skid shoe square holes “C” and one of two holes “A” or “B” behind the skid shoe mounting tab. Secure skid shoes with hex flange locknuts (#4).
10. Tighten carriage bolts (#3A & #3B) to the correct torque.

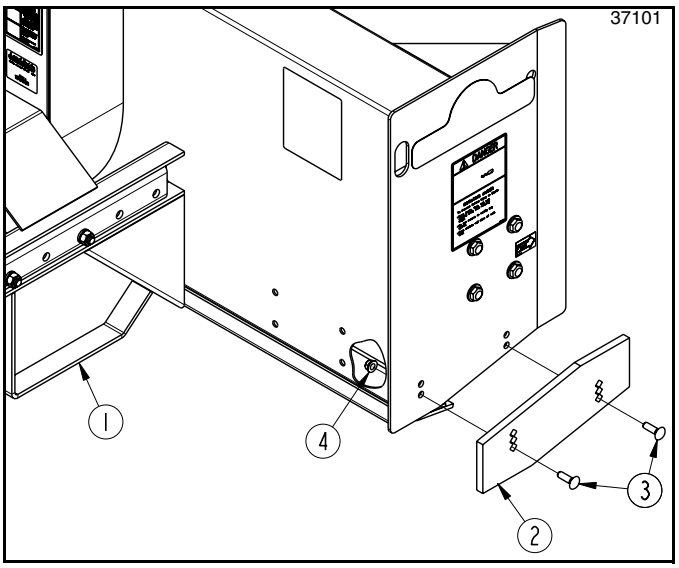


**Outer Wear Bar Adjustment**
**Figure 4-7**

## Outer Wear Bars

***Refer to Figure 4-7:***

1. Disengage power take-off and park on level ground.
2. Place gear selector in park or in neutral with park brake set.
3. Operate 3-point lift lever to raise Snow Blower off the ground high enough to adjust outer wear bars (#2).
4. Shut tractor engine off and remove switch key. Make sure power take-off has stopped before dismounting tractor.
5. To keep Snow Blower from dropping while adjusting outer wear bars (#2), place non-concrete support blocks under Snow Blower support rests (#1) or lower wear bar (#1) shown in Figure 6-9 on page 42.
6. Remove carriage bolts (#3).
7. Raise or lower the Snow Blower as follows:
   - To raise the Snow Blower, move outer wear bars (#2) down to the preferred height and reinsert carriage bolts (#3).
   - To lower the Snow Blower, move outer wear bars (#2) up to the preferred height and reinsert carriage bolts (#3).
8. Secure outer wear bars (#2) with existing hex flange locknuts (#4). Tighten locknuts to the correct torque.

**NOTE:** When outer wear bars (#2) are worn excessively, they can be turned upside down and reused to extend their wear life.

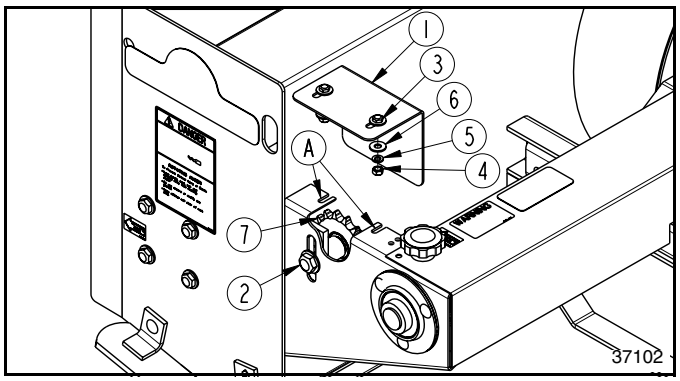


**Drive Chain Take-up Adjustment**
**Figure 4-8**

## Drive Chain Take-up

***Refer to Figure 4-8:***

**IMPORTANT:** Do not over tension drive chain. A tight drive chain will overload drive shaft, auger shaft, and bearings, and accelerate chain and sprocket wear. Damage to components due to an over tensioned drive chain will void its warranty.

1. Disengage power take-off and park on level ground.
2. Place gear selector in park or in neutral with park brake set, shut engine off, remove switch key, and wait for power take-off to stop before dismounting tractor.
3. Loosen bolts (#3) and remove idler guard (#1). Keep guard and guard hardware for reattachment.

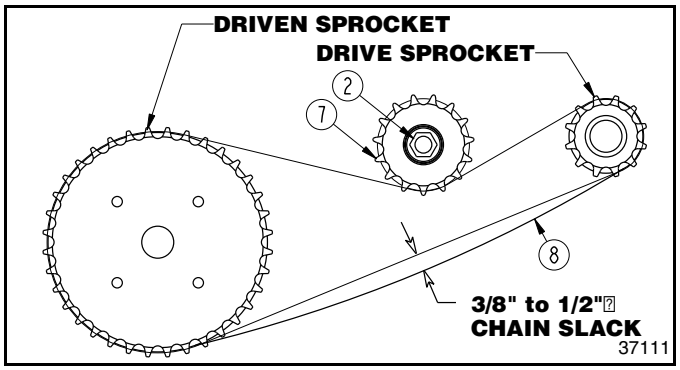


**Drive Chain Take-Up Slack**
**Figure 4-9**

***Refer to Figure 4-9:***

4. Loosen 5/8" bolt (#2) and push down on idler sprocket (#7) until movement in the middle of bottom chain (#8) has 3/8" to 1/2" slack.
5. Hold sprocket (#7) in this position and tighten 5/8"-11 bolt (#2) to the correct torque.

***Refer to Figure 4-8:***

6. Reattach idler guard (#1) to slots "A". Make sure lower flat washers (#6), lock washers (#5) and hex nuts (#4) are below slots "A". Tighten 5/16"-18 x 1" GR5 hex bolts (#3) to the correct torque.

## Operating Checklist

Hazard control and accident prevention are dependent upon the awareness, concern, prudence, and proper training involved in the operation, transport, storage, and maintenance of the Snow Blower. Therefore, it is absolutely essential that no one operates the Snow Blower unless they have read, fully understood, and are totally familiar with the Operator's Manual. Make sure the operator has paid particular attention to:

- **Important Safety Information**, page 1
- **Section 1: Standard Assembly & Set-up,** page 12
- **Section 2: Optional Assembly & Set-up,** page 14
- **Section 3: Tractor Hook-up & Unhook**, page 22
- **Section 4: Adjustments**, page 29
- **Section 5: Operating Instructions**, page 33
- **Section 6: Maintenance & Lubrication**, page 38

Perform the following inspections before using your Snow Blower.

### Operating Checklist

| ✔ | Check | Page |
|---|---|---|
| | Read and follow all safety rules carefully. Refer to "Important Safety Information". | 1 |
| | Make sure all guards & shields are in place. Refer to "Important Safety Information". | 1 |
| | Follow hook-up & driveline Installation. Refer to "Three Point Hook-up" & "Driveline Assembly". | 22 |
| | Make all required adjustments. Refer to "Section 4: Adjustments". | 29 |
| | Preform all required maintenance. Refer to "Section 6: Maintenance & Lubrication". | 38 |
| | Lubricate Snow Blower and driveline as needed. Refer to "Lubrication Points". | 43 |
| | Lubricate gearbox and replace oil plugs. Refer to "Gearbox" lubrication. | 44 |
| | Check initially and periodically for loose bolts & pins. Refer to "Torque Values Chart". | 49 |

## Safety Information

### DANGER

*To avoid serious injury or death:*

- *Do not engage power take-off while connecting or disconnecting the driveline, or while someone is standing near the driveline. A person's body and/or clothing can become entangled in the driveline.*
- *Make sure the implement is lowered to the ground and all hydraulic pressure is relieved before hooking-up or disconnecting any hydraulic lines, fittings, or cylinders.*
- *Always operate Snow Blower with tractor flashing lights turned on. Be extremely careful blowing snow at night with rear bright lights on. Approaching traffic from either direction can mistake which traffic lane you are traveling in and your direction of travel.*
- *Keep children, people, and animals away from the tractor and Snow Blower while unit is operating. They can become entangled in the Snow Blower or ran over by the tractor and/or Snow Blower.*
- *Shutdown the power machine and wait for all rotating/ moving components to stop before dismounting to unplug the snow blower, make adjustments, performing maintenance, clean the snow blower, etc.*
- *All guards and shields must be installed and in good working condition while operating the implement.*
- *Tractor power take-off shaft shield, driveline shields, and gearbox shaft shields must be installed and in good working condition to avoid driveline entanglement and projectiles flying off of the driveline.*
- *Always disconnect driveline from the tractor and secure the implement in the up position with solid, non-concrete supports before servicing the underside. A person can become entangled in the drivetrain if the tractor is started and power take-off is engaged or crushed by an unsupported implement*
- *Always secure equipment with solid, non-concrete supports before working under it. Never go under equipment supported by concrete blocks or hydraulics. Concrete can break, hydraulic lines can burst, and/or hydraulic controls can be actuated even when power to the hydraulics is off.*
- *Do not use a power take-off adapter. The adapter will increase strain on the tractor's power take-off shaft causing possible damage to shaft and driveline. It will also defeat the purpose of the tractor's power take-off shield.*
- *Keep people and animals away while operating the Snow Blower. Never throw snow toward people, animals, or operator. The Snow Blower is capable of picking up solid objects and discharging them at high speeds.*
- *Make certain driveline yokes are securely fastened at each end. A loose yoke can work free allowing the driveline to rotate uncontrollably.*

### WARNING

*To avoid serious injury or death:*

- *Allow only persons to operate this implement who have fully read and comprehended this manual, and who are properly trained in the safe operation of this implement.*
- *Always place tractor in park or set park brake, disengage power take-off, shut tractor engine off, remove ignition key, and wait for all moving parts to stop before dismounting tractor.*
- *Do not lift unit up with driveline engaged or operate unit in the raised position. The driveline can break and throw off flying projectiles that can cause bodily injury or death.*
- *Do not operate and/or travel across inclines where the tractor and/or implement can rollover. Consult your tractor's manual for acceptable inclines the tractor is capable of traveling across.*

- *Never carry riders on the implement or power machine. Riders can obstruct the operator's view, interfere with controls, be pinched by moving components, become entangled in rotating components, struck by objects, thrown about, fall off and be run over, etc.*
- *Never run gravel, crushed rock, or other solid objects through the Snow Blower. Doing so will damage the Snow Blower. The Snow Blower is also capable of throwing solid objects at high speeds causing property damage and injury or death to animals and people.*
- *Always dress to stay warm in cold weather. Never allow body or extremities to become too cold. Use a cab to provide protection against the cold. Go inside a heated area to warm-up when getting too cold.*
- *Dress properly for the job. Do not wear loose fitting clothing or clothing with pull strings. Keep long hair tucked in. Clothing and hair can become entangled in rotating components. Wear footwear that will improve footing on slippery surfaces.*
- *Always be aware of pedestrians and vehicle traffic. Move snow during low-traffic hours. Adjust chute to correct trajectory due to wind that will not create a driving hazard for all other vehicles.*
- *Clear area to be worked of debris and other unforeseen removable objects. Mark any potential hazards that cannot be removed such as tree stumps, post, rocks, holes, drop-offs, etc. with a visible flag.*
- *Do not remove snow from an icy surface unless skid steer or tractor is properly equipped for working on such a surface. Always proceed with caution when traveling on ice. An icy surface covered with snow will result in loss of traction and steering control.*
- *Never remove snow that has been plowed. Plowed snow contains foreign particles such as dirt and rocks that can damage the unit and cause serious bodily injury or death.*
- *Never operate Snow Blower without good visibility and light. Use a tractor equipped with a cab to keep snow from being blown by wind into the operator's face.*
- *Always travel removing snow at a speed that allows the operator to be in control at all times and always be ready to make emergency stops. Snow removal speed will vary depending on depth of snow, snow moisture, and how tight the snow is compacted.*
- *Never pile snow where it obstructs visibility of traffic. Never pile snow near fire hydrants, mailboxes, water drains, shut-off valves, electrical boxes, handicap parking areas, etc. Always comply with all federal, state, and local laws pertaining to snow removal.*
- *The chute can rotate 360 degrees. Never rotate chute to throw snow at the tractor. The Snow Blower is capable of picking up solid objects and discharging them at high speeds.*
- *Beware of obstacles along side the tractor while making turns backing-up removing snow. Never swing front of tractor or tractor mounted front loader into fire hydrants mail boxes, buildings, vehicles, fences, trees, or other standing obstacles.*
- *If required, use back-up alarm to warn others you are backing-up. Always comply with all federal, state, and local laws.*
- *Perform scheduled maintenance. Check for loose hardware, missing parts, broken parts, structural cracks, and excessive wear. Make repairs before putting the implement back into service.*
- *Do not operate Snow Blower with auger flighting or impeller blades that are broken or bent making contact with the housing. Broken or bent flighting and blades can break loose at high speeds.*
- *Do not operate a broken or bent driveline. Such a driveline will break apart while rotating at high speeds. Always remove the implement from use until the damaged driveline can be repaired or replaced.*
- *Do not use implement as a man lift or work platform. It is not properly designed or guarded for this use.*
- *Do not use implement to lift objects; to pull objects such as fence posts, stumps, etc; or to push objects. The unit is not designed or guarded for these uses.*
- *Do not use implement to tow other equipment unless it is designed with a tow hitch. Doing so can result in loss of control and damage the equipment.*
- *Some tractors are equipped with two power take-off speeds. Be certain your tractor's power take-off shaft is set-up to operate at 540 rpm. Do not exceed 540 rpm power take-off speed. Excessive speed can damage drive/driven components and increase the risk of a thrown object hazard.*
- *Hydraulic fluid under high pressure will penetrate the skin or eyes causing serious injury. Wear protective gloves and safety glasses or goggles when working with hydraulic systems. Use a piece of cardboard or wood, rather than hands, when searching for leaks. If an accident occurs, seek immediate emergency medical care or gangrene may result. DO NOT DELAY.*

**IMPORTANT:** Check driveline coupler bolt at the gearbox input shaft daily to verify it is tight and secured to the gearbox input shaft. Verify driveline pull collar at the tractor shaft is locked.

**IMPORTANT:** Never operate Snow Blower with chute throwing snow toward property such as vehicles, buildings, trailers etc. that can be scratched, dented or broken by thrown projectiles.

**IMPORTANT:** Do not use Snow Blower as a Box Scraper or to blow other materials. Doing so can break the auger, impeller, and cause structural damage to the unit.

**NOTE:** Always check with local regulations to know where snow can be legally piled. Never pile snow on someone else's property, streets, or sidewalks.

## Inspection Procedures

Make the following inspections with Snow Blower attached to a tractor, gearshift set in park, power take-off disengaged, and power take-off completely stopped:

1. Inspect tractor safety equipment to make sure it is in good working condition.
2. Check levelness of unit. Refer to **"Level Snow Blower"** on page 25.
3. Carefully raise and lower implement to ensure drawbar, tires, and other equipment on the tractor do not contact Snow Blower frame or driveline.
4. Check driveline guards to make certain they are in good working condition and in place.
5. Check driveline to be sure it is securely connected to tractor power take-off shaft and Snow Blower gearbox shaft.
6. Check for and remove foreign objects wrapped around auger and Impeller.
7. Check for bent, broken, and extreme wear on auger flighting and impeller. Repair auger and impeller as required.
8. Remove solid supports from under the Snow Blower and verify skid shoes or outer wear bars are set at the correct height.

The remaining inspections are made by engaging power take-off to check for auger and impeller interferences.

### ⚠ WARNING

*To avoid serious injury or death: Stop power take-off immediately if auger or impeller makes contact with the Snow Blower housing. Wait for the power take-off to come to a complete stop before dismounting from the tractor to check for probable causes. Make necessary repairs before continuing on.*

### ⚠ CAUTION

*To avoid minor or moderate injury: Some tractors are equipped with two power take-off speeds. Be certain your tractor's power take-off shaft is set-up to operate at 540 rpm. Do not exceed 540 rpm power take-off speed. Excessive speed can damage drive/driven components and increase the risk of a thrown object hazard.*

**IMPORTANT:** Do not exceed rated power take-off speed. Excessive engine speed will cause damage to power train components.

9. Start tractor, set throttle to idle or slightly above idle, and slowly engage power take-off.
10. Once Snow Blower is running smoothly, increase tractor power take-off speed to 540 rpm. Stop power take-off immediately if an unusual sound is heard.
11. Investigate cause of noise and make repairs before putting Snow Blower back into service.

## Transporting

### ⚠ WARNING

*To avoid serious injury or death:*

*When traveling on public roadways, travel in such a way that faster moving vehicles may pass safely. Use hazard lights, clean reflectors, and a slow moving vehicle sign that is visible from the back to warn operators in other vehicles of your presence. Always comply with all federal, state, and local laws.*

**IMPORTANT:** Always disengage power take-off and wait for the driveline to stop rotating before raising the implement to the transport position.

1. Make sure driveline does not contact tractor or Snow Blower when raising unit to transport position.
2. Reduce tractor ground speed when turning and leave enough clearance so Snow Blower does not contact obstacles such as buildings, trees, or fences.
3. Limit transport speed to 20 mph. Transport only with a tractor of sufficient size and horsepower.
4. When traveling on roadways, transport in such a way that faster moving vehicles may pass you safely.
5. Shift tractor to a lower gear when traveling over rough or hilly terrain.

## Tractor Shutdown Procedure

The following are basic tractor shutdown procedures. Follow these procedures and any additional shutdown procedures provided in your tractor Operator's Manual before leaving the operator's seat.

1. Reduce engine speed and disengage power take-off if engaged.
2. Park tractor and implement on level, solid ground.
3. Lower implement to ground or onto non-concrete support blocks.
4. Put tractor in park or set park brake, turn off engine, and remove ignition key to prevent unauthorized starting.
5. Relieve all hydraulic pressure to auxiliary hydraulic lines.
6. Wait for all components to come to a complete stop before leaving the operator's seat.
7. Use steps, grab-handles and anti-slip surfaces when stepping on and off the tractor.

## General Operation Instructions

It is important that you familiarize yourself with the Operator's Manual, complete Operator's Checklist, properly attach the Snow Blower to your tractor, and make leveling adjustments before running an operational safety check. If you detect a malfunction in either the Snow Blower or tractor during the operational safety check, immediately shut tractor off, remove switch key, and make all necessary repairs/adjustments before continuing.

Make sure the tractor park brake is engaged, power take-off is disengaged, and Snow Blower is resting on the ground before starting tractor for the operational safety check. Start tractor and set engine throttle speed at a low idle. Raise Snow Blower with tractor's rear hydraulic lift control lever to transport position making sure that the driveline does not bind and does not contact the Snow Blower frame. Lower Snow Blower to the ground and at a low engine speed engage power take-off. If everything is running smoothly at a low idle, slowly increase tractor engine rpm until it reaches the Snow Blower's full power take-off operating speed of 540 rpm. If everything is still running smoothly, return engine to low idle, and disengage power take-off.

You should now be ready to transport to your snow blowing site at a safe ground speed. On roadways transport in such a manner that faster moving vehicles can easily see you and pass you safely. Reduce your speed when traveling over rough and hilly terrain. Avoid quick or sharp steering corrections. Take extra care to ensure that the Snow Blower doesn't come into contact with obstacles such as trees, buildings, or fences. Use accessory lights and appropriate reflective devices to provide adequate warning to pedestrians and other vehicle operators when traveling on public roads and in the dark of night. Comply with all local, state, and federal laws.

It is important that you know the area where snow is to be removed and what lies beneath the snow. If possible, survey the area ahead of the snow. Remove all possible obstructions and mark any obstructions that cannot be removed with flags that project above the snow. If you are unfamiliar with the area, ask someone who can identify hidden obstructions so that you can mark them with a flag. Flag manholes, water meters, gas meters, culvert edges, fire hydrants, stumps, and other obstructions that are not easily seen. It really pays to inspect a new area and to develop a safe plan before moving snow.

Determine how close to the ground the Snow Blower can be operated. Set skid shoes or outer wear bars to hold the Snow Blower off the ground at a predetermined height. Surfaces with gravel or crushed rock will require a higher setting than hard flat surfaces such as asphalt and concrete. Never set Snow Blower so low as to pick-up gravel and rock.

Determine wind direction and devise a removal plan that will allow wind to carry blown snow away from the operator and not towards the operator. Snow discharged out the Snow Blower and blown back at you will obstruct your view and can totally block your vision of work.

Determine direction to blow snow and rotate chute to blow snow in that direction. To minimize work, do not blow snow over an area that has already been cleared of snow and never rotate chute to blow snow towards the tractor. Hard objects can be thrown at the tractor and operator.

Determine deflector angle and set deflector to this angle. This angle will vary depending on how far snow is to be blown, how light and fluffy the snow is, and how wet and heavy it is.

Some adjustments to the chute rotation and deflector angle may be necessary after traveling a few feet. If operator needs to get off the tractor to make adjustments, he must stop the tractor, disengage power take-off, place gear selector in park or in neutral with park brake set, shut engine off, remove switch key, and wait for power take-off to stop running before dismounting tractor.

It is now time to back the Snow Blower up to your starting point. Once at your starting point, stop backing up and lower Snow Blower onto its skid shoes or outer wear bars. Make sure all pressure is off the 3-point lift arms.

The heavier and deeper the snow, the slower your will need to travel. Make certain you maintain 540 rpm power take-off speed and a travel speed between 1 and 5 MPH that will allow you to be in control at all times. Make a tractor gear and range selection that will enable you to maintain these speed combinations.

Set throttle at an idle speed, and engage power take-off. Listen for unusual clicking or knocking sounds as the auger and impeller start rotating. If everything sounds fine increase throttle to 540 rpm power take-off speed. If an unusual sound is heard, shut tractor down immediately, investigate cause, and make necessary repairs before continuing.

Start backing up slowly with engine running at 540 rpm power take-off speed. If travel speed is too fast, shift gears to a slower speed. Only shift to a higher speed if you are certain it will be a safe traveling speed. The heavier and deeper the snow the slower you will need to travel. Make certain you maintain 540 rpm power take-off speed and a travel speed that allows you to be in control at all times. Make a tractor gear and range selection that will enable you to maintain these speed combinations.

Turn your head to look where you are traveling while backing-up. Do not use rear view mirrors to view direction of travel while backing up. It is very important that you get a full field of view to prevent an accident.

Beware of obstacles along side the tractor while making turns backing-up removing snow. Never swing front of tractor or tractor mounted front loader into fire hydrants mail boxes, buildings, vehicles, fences, trees, or other standing obstacles. Shift to a lower gear and travel very slow when in a tight situation to allow time to react and stop the tractor before hitting an obstacle.

Once you have reached end of travel, stop tractor, raise Snow Blower up, and travel forward to the front of your work to make another run at blowing snow. It is not necessary to disengage power take-off while traveling forward if Snow Blower is raised to a height that does not exceed driveline limits. For explanation of driveline limits, see **"Check 3-Point Driveline Interference"** on page 25.

Once at the front, back Snow Blower up to your next starting point, lower unit down onto its skid shoes or outer wear bars until all pressure is off the 3-point arms, engage power take-off, and begin traveling blowing snow.

With a little practice you will be pleased with what you and your Land Pride Snow Blower can do. Whether you are done blowing snow, need to take a break, or just need to make a few adjustments to the Snow Blower, remember to always do the following:

- Reduce tractor's engine rpm
- Disengage power take-off
- Stop on level ground and set tractor park brake
- Turn off the engine and remove the key
- Stay on the tractor until the Snow Blower auger have come to a complete dead stop.

## General Maintenance Information

Proper servicing and adjustments are key to the long life of any implement. With careful inspection and routine maintenance, you can avoid costly downtime and repair.

Check all bolts after using unit for several hours to be sure they are tight. Replace any worn, damaged, or illegible safety labels by obtaining new labels from your Land Pride dealer.

### DANGER

*To avoid serious injury or death:*

*Always secure equipment with solid, non-concrete supports before working under it. Never go under equipment supported by concrete blocks or hydraulics. Concrete can break, hydraulic lines can burst, and/or hydraulic controls can be actuated even when power to the hydraulics is off.*

### WARNING

*To avoid serious injury or death:*

- *Make sure controls are all in the neutral position or park before starting the power machine.*
- *Do not alter implement or replace parts on the implement with other brands. Other brands may not fit properly or meet OEM (Original Equipment Manufacturer) specifications. They can weaken the integrity and impair the safety, function, performance, and life of the implement. Replace parts only with genuine OEM parts.*

## Hydraulic System

One of the most important things you can do to prevent hydraulic system problems is ensure that your tractor's reservoir remains free of dirt and contamination.

Use a clean cloth to wipe hose ends before attaching them to your tractor. Replace your tractor's hydraulic filter element at the prescribed intervals. These simple maintenances will go a long way to prevent occurrence of control valve and hydraulic cylinder problems.

## Auger & Impeller Inspection

***Refer to Figure 6-1:***

1. Check 3/8"-16 GR5 Impeller bolt (#4) for tightness, Make certain it is torqued tight.
2. Check impellers (#1) for wear, structural cracks, and breakage. Repair or replace impeller before it causes structural damage to Snow Blower housing.
3. Check for bent impellers (#1) that are making contact or are about to make contact with the Snow Blower housing. Repair or replace impeller before it causes structural damage to the Snow Blower housing.
4. Check auger flighting (#3) and auger paddles (#2) for wear, structural cracks, bending, and breakage. Repair or replace auger before components break-off and are sent into the impeller or through the air.
5. Check end bearings (#7) for wear. Replace bearings that are worn excessively.
6. Lubricate bearings as required. See lubrication schedule for **"Auger Flange Bearings"** on page 43.
7. Check bearing mounting hardware (#5) for tightness. Make certain they are tightened to the correct torque.
8. Check drive chain, drive sprocket, idler sprocket, and driven sprocket (#6) for wear and chain tightness. Replace chain and/or sprockets if they are worn excessively. See **"Drive Chain Take-up"** on page 32.

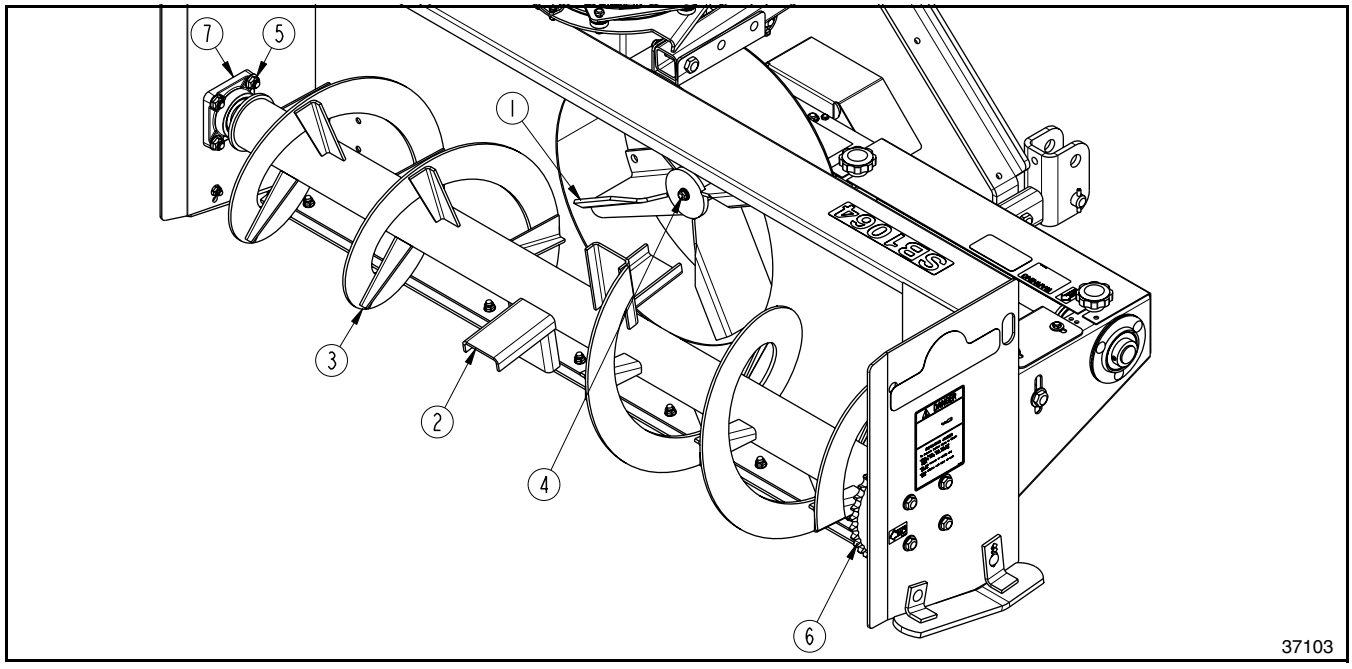


**Auger & Impeller Inspection**
**Figure 6-1**

## Chute Bearings

***Refer to Figure 6-2:***

Chute bearings (#1) rotates with the chute. Should a bearing stop rotating, remove ice & snow build-up around bearing. Have your nearest Land Pride Service Center replace the bearing if it continues to not rotate.

## Shear Bolt Protection

The Snow Blower is protected from large objects with two shear bolts. The shear bolts must be kept tight to keep from damaging the bolts & enlarging their holes.

### Drive Shaft Shear Bolt

***Refer to Figure 6-3:***

There are two holes located on the Snow Blower above the drive chain for storing the provided extra drive shaft shear bolts with locknuts. A good practice would be to keep shear bolts in these two holes at all times. Purchase extra shear bolts from your nearest Land Pride dealer.

1. Loosen hand knobs (#6) and remove rear drive shaft guard (#3).
2. Realign holes in drive shaft tabs (#1 & #2) and insert new shear bolt (#4) through the holes.
3. Secure shear bolt with hex nylock nut (#5). Tighten nylock nut.
4. Replace guard (#3) and secure with knobs (#6).

**Drive Shaft Shear Bolt Part Numbers**

| Part No. | Part Description |
|---|---|
| 802-604C | 5/16"-18 x 1" GR8 hex head cap screw |
| 803-084C | 5/16"-18 Nylock hex nut (Torque nut to 25ft. lbs.) |

### 3-Point Driveline Shear Bolt

***Refer to Figure 6-2:***

There are two holes on the Snow Blower near the gearbox for storing extra driveline shear bolts with locknuts. A good practice would be to keep shear bolts in these two holes at all times. Purchase extra shear bolts from your nearest Land Pride dealer.

***Refer to Figure 6-4:***

1. Realign holes in driveline tabs (#1 & #2) and insert new shear bolt (#3) through these holes.
2. Secure shear bolt with locknut (#4). Tighten locknut.

**3-Point Driveline Shear Bolt Part Numbers**

| Part No. | Part Description |
|---|---|
| SB10 & SB15 Series | |
| 165.000.571 | BOLT & NUT M8 x 50 C1.6.6 (Torque nut to 19 ft. lbs.) |
| SB25 Series | |
| 165.000.583 | BOLT & NUT M10 x 60 C1.6.6 (Torque nut to 39 ft. lbs.) |

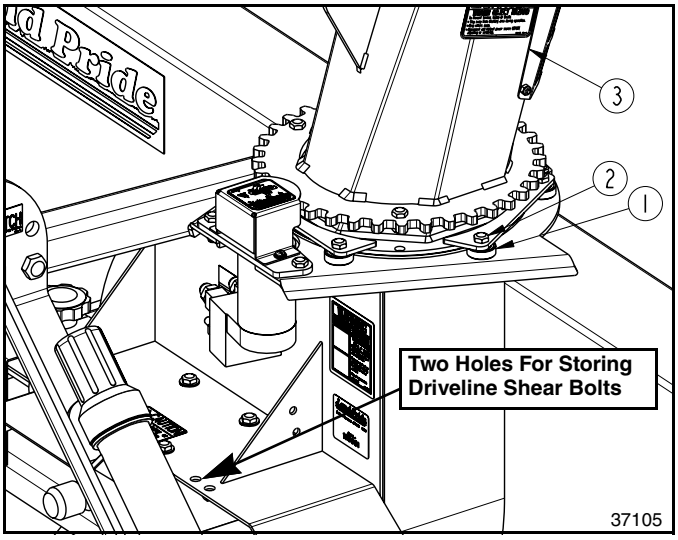


**Driveline Shear Bolt Storage & Chute Bearing Maintenance**
**Figure 6-2**

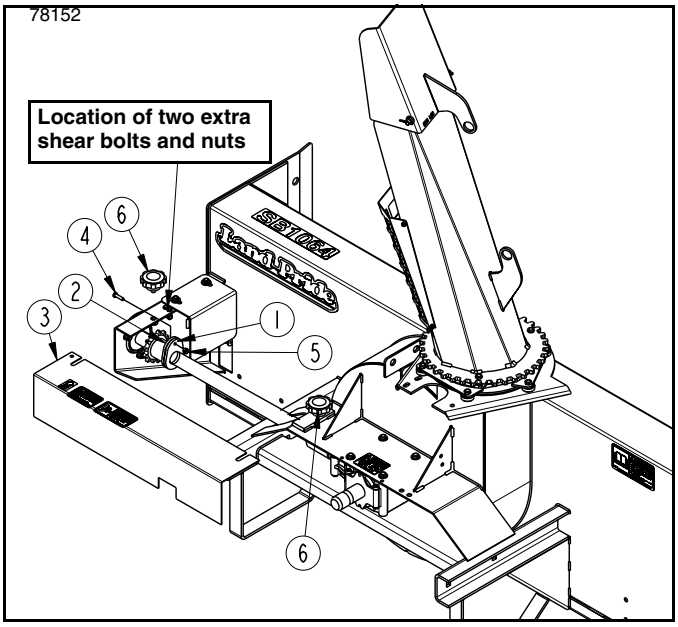


**Drive Shaft Shear Bolt Replacement & Storage**
**Figure 6-3**

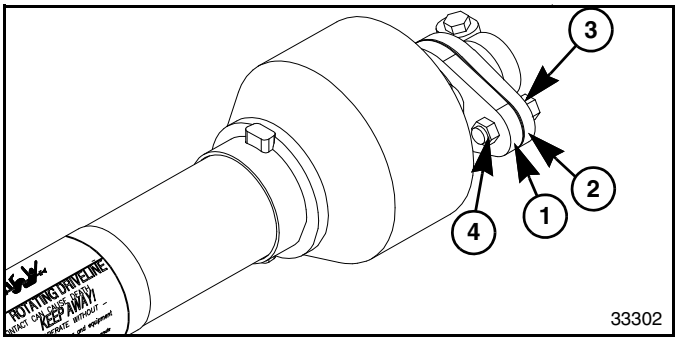


**Driveline Shear Bolt Replacement**
**Figure 6-4**

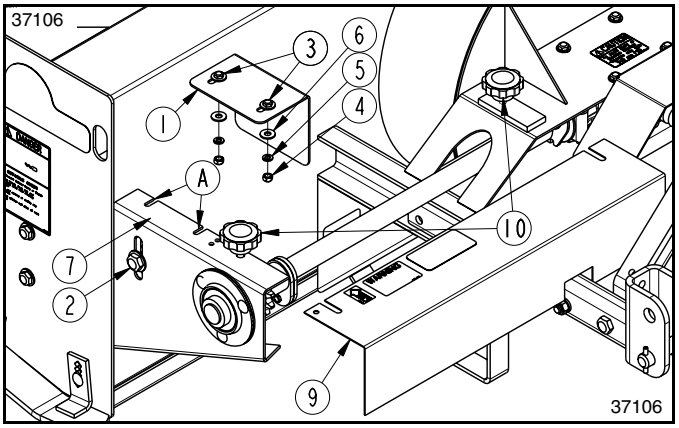


**Drive Chain Replacement**
**Figure 6-5**

## Drive Chain

***Refer to Figure 6-5:***

| Drive Chain Part Number | |
|---|---|
| **Part No.** | **Part Description** |
| 809-301C | #60 ROLLER CHAIN x 84 PITCHES WITH CONNECTOR |

**IMPORTANT:** Do not over tension drive chain. A tight drive chain will overload drive shaft, auger shaft, and bearings, and accelerate chain and sprocket wear. Damage to components due to an over tensioned drive chain will void its warranty.

1. Loosen hand knobs (#10) and remove rear drive shaft guard (#9).
2. Loosen nuts (#4). With nuts (#4) still attached to bolts (#3), remove idler guard (#1) from slots "A".
3. Loosen bolt (#2) and pull idler sprocket (#7) up. Remove drive chain coupler link and drive chain.
4. Inspect drive chain for wear or have your nearest Land Pride service center inspect the drive chain. A worn drive chain will accelerate sprocket wear. Replace worn drive chain when needed.
5. Reattach existing or new drive chain to the unit. Pull up on idler sprocket (#7) and position upper chain strand under the idler sprocket.
6. **See Figure 4-9 on page 32:** Push down on idler sprocket (#7) until movement in the middle of bottom chain (#8) has 3/8" to 1/2" slack.
7. Hold sprocket in this position and tighten 5/8"-11 GR5 bolt (#2) to the correct torque.
8. Reattach idler guard (#1) to slots "A". Make sure lower flat washers (#6), lock washers (#5) and hex nuts (#4) are below the slots. Tighten 5/16"-18 x 1" GR5 hex bolts (#3) to the correct torque.
9. Replace rear drive shaft guard (#9) and hand tighten hand knobs (#10).

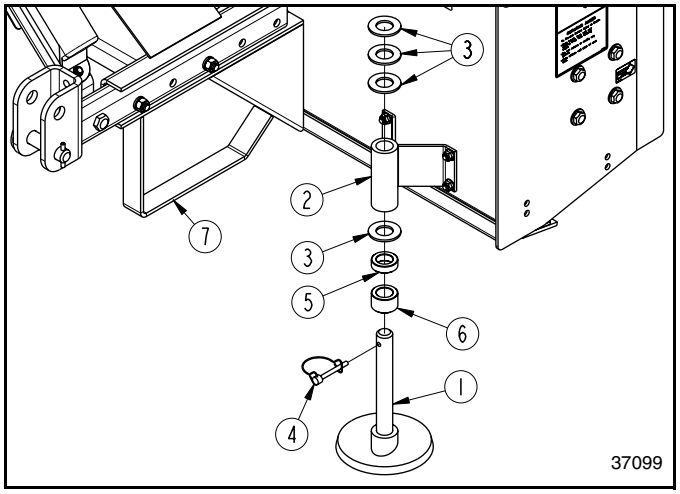


**Inner Skid Shoe Replacement**
**Figure 6-6**

## Inner Skid Shoes (Optional)

***Refer to Figure 6-6:***

| Inner Skid Shoe Part Numbers | |
|---|---|
| **Part No.** | **Part Description** |
| 301-293H | BUTTON TYPE SKID SHOE |

Inspect inner skid shoes for wear and replace as needed.

1. Disengage power take-off, stop on level ground, and place gear selector in park or in neutral with park brake set.
2. Operate 3-point lift lever to raise Snow Blower off the ground high enough to adjust inner skid shoes (#1).
3. Shut tractor engine off and remove switch key. Make sure power take-off has stopped before dismounting tractor.
4. To keep Snow Blower from dropping while adjusting inner skid shoes (#1), place non-concrete support blocks under Snow Blower support rests (#7) or lower wear bar (#1) shown in Figure 6-9 on page 42.
5. Install new inner skid shoe on the right-hand side of the Snow Blower as follows:
   a. Remove pin (#4), top spacers (#3, #5, and/or #6), and used skid shoe (#1). Save spacers for re-installation in step 5d below.
   b. Remove spacers (#3, #5, and/or #6) from used skid shoe (#1). Reinstall these spacers on the new skid shoe.
   c. Insert new skid shoe (#1) in skid shoe mount (#2).
   d. Install spaces removed in step 5a above onto new skid shoes (#1).
   e. Secure spacers and skid shoes with existing wire retaining pin (#4). Make sure wire retainer is caught over end of pin.
6. Repeat step 5 above to install a new skid shoe on the left-hand side of the Snow Blower.

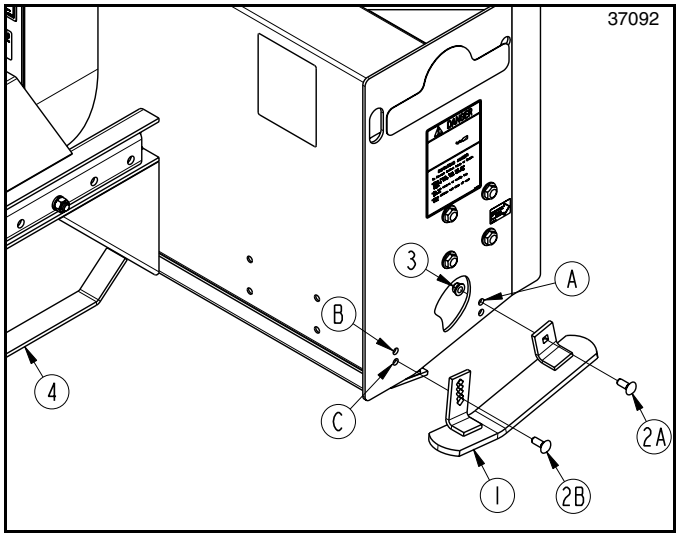


**Outer Skid Shoe Replacement**
**Figure 6-7**

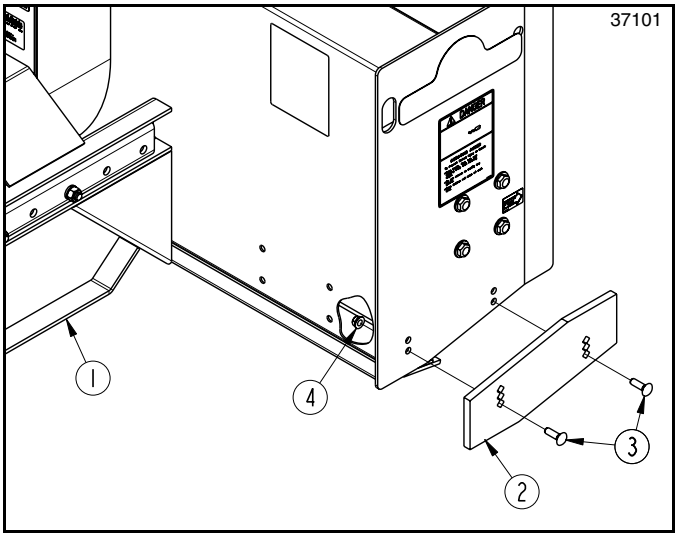


**Outer Wear Bar Replacement**
**Figure 6-8**

## Outer Skid Shoes (Optional)

***Refer to Figure 6-7:***

| Outer Skid Shoe Part Numbers | |
|---|---|
| **Part No.** | **Part Description** |
| 370-113H | OUTER LEFT-HAND SKID SHOE |
| 370-114H | OUTER RIGHT-HAND SKID SHOE |

Inspect outer skid shoes for wear and replace as needed.

1. Disengage power take-off, park on level ground, and place gear selector in park or in neutral with park brake set.
2. Operate 3-point lift lever to raise Snow Blower off the ground high enough to adjust outer skid shoes (#1).
3. Shut tractor engine off and remove switch key. Make sure power take-off has stopped before dismounting tractor.
4. To keep Snow Blower from dropping while adjusting outer skid shoes (#1), place non-concrete support blocks under Snow Blower support rests (#4) or lower wear bar (#1) shown in Figure 6-9 on page 42.
5. Remove carriage bolts (#2A & #2B) and right-hand skid shoe (#1). Discard skid shoe and save hardware for reattachment of new skid shoe.
6. Attach right-hand skid shoe (#1) to upper hole “A” with 3/8"-16 x 1" GR5 carriage bolt (#2A) and hex flange locknut (#3).
7. Attach right-hand skid shoe (#1) to hole “B” or “C” with 3/8"-16 x 1" GR5 carriage bolt (#2B) and hex flange locknut (#3).
8. Tighten locknuts (#3) to the correct torque.
9. Repeat steps 4 to 8 above for the left-hand skid shoe.

## Outer Wear Bars (Optional)

***Refer to Figure 6-8:***

| Outer Wear Bar Part Numbers | |
|---|---|
| **Part No.** | **Part Description** |
| 370-212D | OUTER WEAR BAR |

**NOTE:** When outer wear bars (#2) are worn excessively, they can be rotated upside down 180° and reused to extend their wear life.

Inspect outer wear bars and carriage bolts for wear and replace as needed.

1. Disengage power take-off, park on level ground, and place gear selector in park or in neutral with park brake set.
2. Operate 3-point lift lever to raise Snow Blower off the ground high enough to adjust outer wear bars (#2).
3. Shut tractor engine off and remove switch key. Make sure power take-off has stopped before dismounting tractor.
4. To keep Snow Blower from dropping while adjusting outer wear bars (#2), place non-concrete support blocks under Snow Blower support rests (#1) or lower wear bar (#1) shown in Figure 6-9 on page 42.
5. Remove carriage bolts (#3) and outer wear bars (#2).
6. Inspect hardware for wear. Save if hardware is not worn. Discard hardware and purchase new when worn excessively.
7. Inspect outer wear bars. Keep outer wear bars if they can be rotated 180° and reused. Discard outer wear bars if worn excessively on both edges.
8. Attach existing/new outer wear bars with existing/new carriage bolts (#3) and hex flange locknuts (#4).
9. Tighten locknuts (#4) to the correct torque.

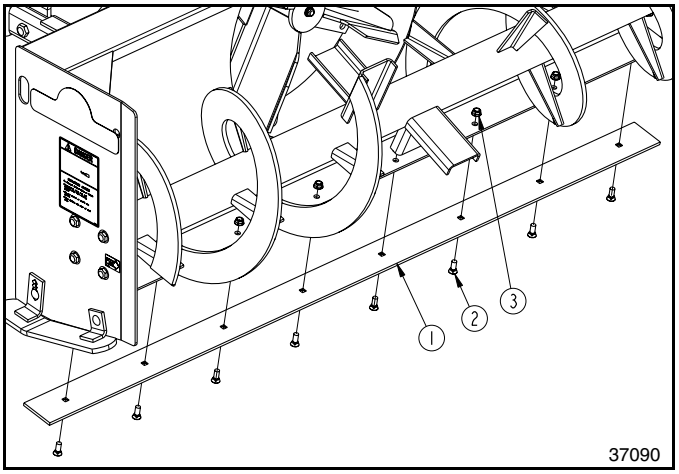


**Lower Wear Bar Replacement**
**Figure 6-9**

## Lower Wear Bar (Optional)

***Refer to Figure 6-9:***

Two lower wear bar (#1) options are available (lower hardened steel wear bar and lower steel wear bar) in 51", 64", 74" & 84" lengths. See your nearest Land Pride dealer for part numbers and pricing.

**IMPORTANT:** Make sure the lower wear bar (#1) is replaced before auger housing becomes exposed to wear.

**NOTE:** When front edge of lower wear bar (#1) is worn excessively, it can be rotated 180° and reused to extend its' wear life.

Inspect lower wear bar (#1) and plow bolts (#2) for wear. Rotate lower wear bar 180° and reuse or replace if both edges are worn excessively.

1. Remove hex flange locknuts (#3), plow bolts (#2), and lower wear bar (#1).
2. Attach existing/new lower wear bar (#1) to bottom of Snow Blower frame with existing/new plow bolts (#2) and hex flange locknuts (#3).
3. Tighten locknuts to the correct torque.

## Long-Term Storage

Clean, inspect, service, and make necessary repairs to the implement when storing it for long periods and at the end of the season. This will help ensure the unit is ready for field use the next time you hook-up to it.

### ⚠ DANGER

*To avoid serious injury or death:*

- *Always disconnect driveline from the tractor and secure the implement in the up position with solid, non-concrete supports before servicing the underside. A person can become entangled in the drivetrain if the tractor is started and power take-off is engaged or crushed by an unsupported implement*
- *Always secure equipment with solid, non-concrete supports before working under it. Never go under equipment supported by concrete blocks or hydraulics. Concrete can break, hydraulic lines can burst, and/or hydraulic controls can be actuated even when power to the hydraulics is off.*

1. Clean off any dirt and grease that may have accumulated on the Snow Blower and moving parts and then wash surface thoroughly with a garden hose.
2. Check impeller, auger, lower wear bar, outer wear bars, and/or skid shoes for wear and breaks. Repair or replace if necessary. See **"Auger & Impeller Inspection"** on page 38.
3. Inspect for loose, damaged, or worn parts. Make adjustments, repairs, and/or replace as needed.
4. Repaint parts where paint is worn or scratched to prevent rust. Ask your Land Pride dealer for aerosol touch-up paint. They are also available in touch-up bottles with brush, quarts, and gallon sizes by adding TU, QT, or GL to the end of the aerosol part number.

**Land Pride Aerosol Touch-up Paint**

| Part No. | Part Description |
|---|---|
| 821-011C | PAINT LP BEIGE SPRAY CAN |
| 821-054C | PAINT MEDIUM RED SPRAY CAN |
| 821-058C | PAINT GREEN SPRAY CAN |
| 821-066C | PAINT ORANGE SPRAY CAN |
| 821-070C | PAINT GP GLOSS BLACK SPRAY CAN |

5. Replace all damaged or missing decals.
6. Lubricate as noted in **"Lubrication Points"** starting on page 43.
7. Apply a coating of oil to the areas without paint due to high wear to minimize oxidation.
8. Store Snow Blower on a level surface in a clean, dry place. Inside storage will reduce maintenance and make for a longer Snow Blower life.
9. Follow all **"Unhook Snow Blower"** instructions on page 28 when disconnecting Snow Blower from tractor.

## Ordering Replacement Parts

Land Pride offers equipment in factory standard Beige with black highlights. This implement may also be purchased in Orange, Green, or Red.

When ordering an optional color, the suffix number corresponding to the color must be added at the end of the part number. Parts ordered without the suffix number will be supplied in factory standard colors.

**81 . . . . . Green** **83 . . . . . Red**
**82 . . . . . Orange** **85 . . . . . Black**

For example, if you are ordering a replacement part with part number 555-555C and the existing part is orange, then add the suffix 82 to the end of the number to make the part number read 555-555C82.

## Lubrication Points

**Lubrication Legend**

Multi-purpose spray lube

Multi-purpose grease lube

Multi-purpose oil lube

50 Hrs — Intervals in hours at which lubrication is required

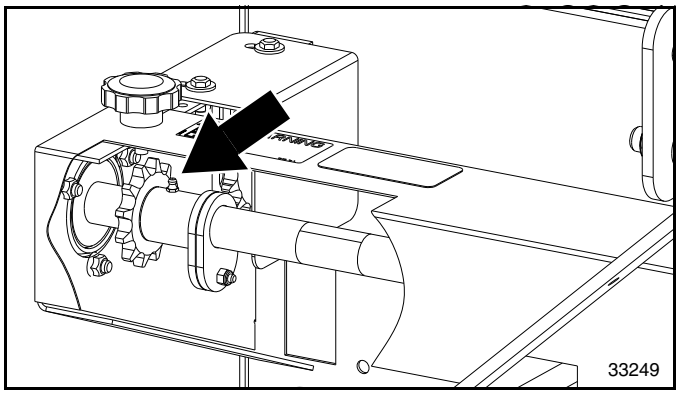


10 Hours

### Shear Bolt Sprocket Hub

1 - Zerk

Type of Lubrication: Multi-purpose Grease

Quantity = 2 Pumps

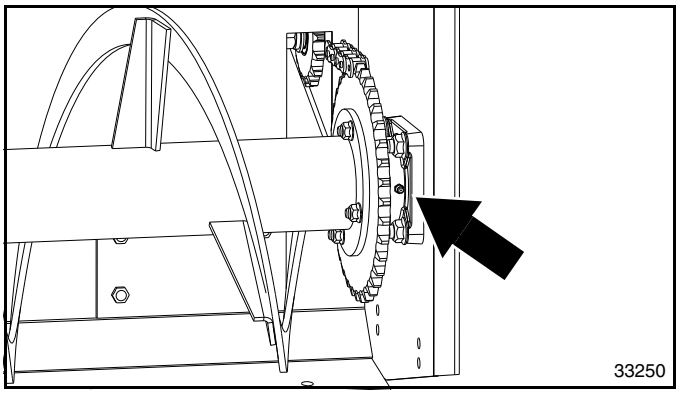


10 Hours

### Auger Flange Bearings

2 - Zerks: One on each end

Type of Lubrication: Multi-purpose Grease

Quantity = As needed

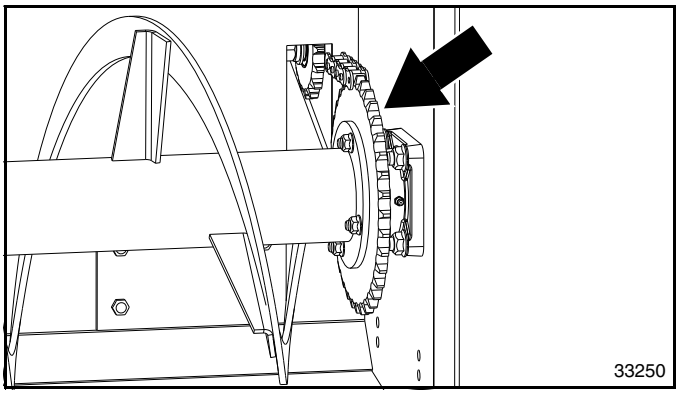


As Required

### Drive Chain

Type of Lubrication: Commercial chain lubricant

Quantity = As needed. Be sure to lubricant drive chain just before storing Snow Blower.

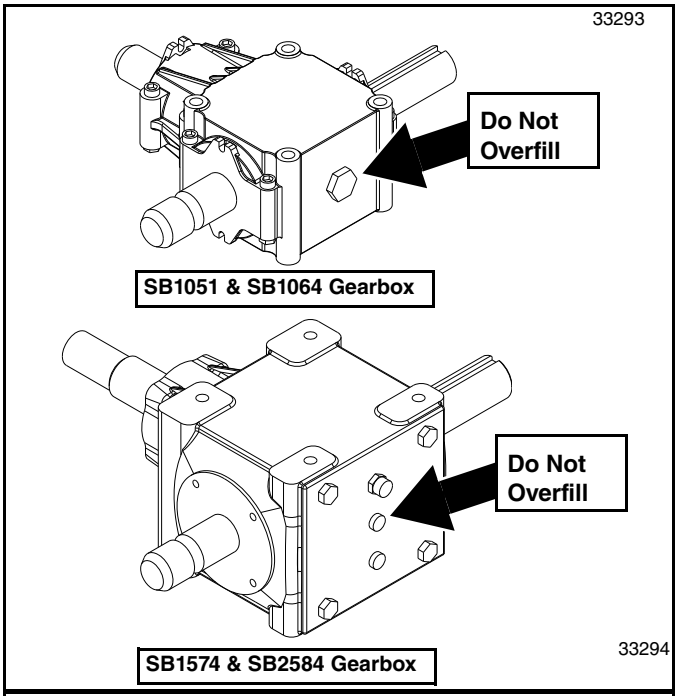


**NOTE:** Use a suction or siphon pump to drain gearboxes of oil when there is not an oil drain plug.

## Gearbox

**NOTE:** Do not overfill! Snow Blower should be level when checking oil. Oil expands when hot, therefore, always check oil level when cold.

Remove oil level plug shown with arrow. If oil is below bottom of plug hole, add recommended gear lube through oil level plug hole until oil flows out of the hole. Reinstall and tighten oil level plug.

Type of Lubrication: 80-90W EP Gear Lube

Quantity = Fill until oil begins to flow out of oil level plug hole in gearbox.

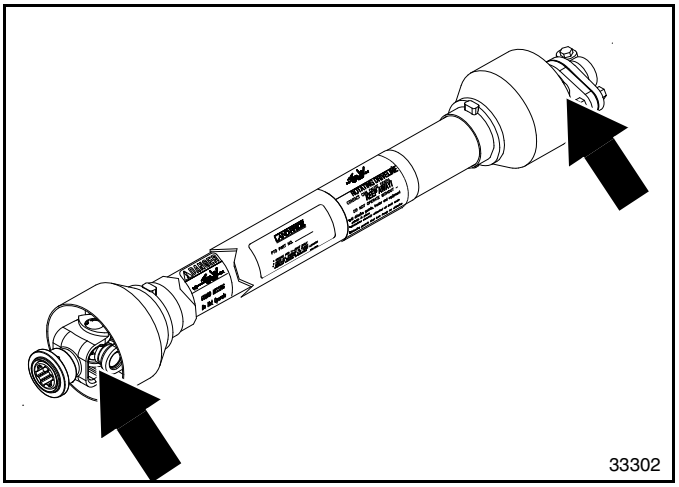


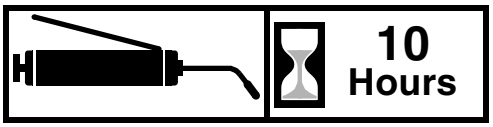


## Driveline U-joints

Driveline U-joint with grease every 8 hours of operation

2 - Zerks

Type of grease = Multi-Purpose

Quantity = As needed

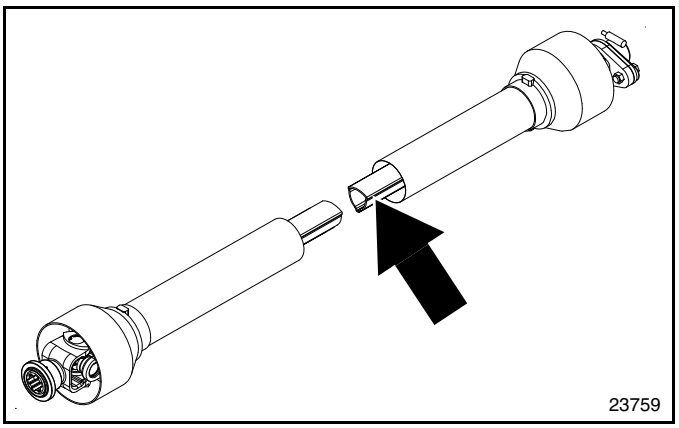


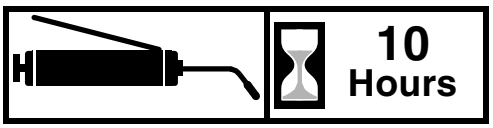


## Driveline Shaft

Disconnect driveline shaft from the tractor and slide apart. Clean and coat the inner tube of the driveline shaft with a light film of grease and then reassemble.

Type of grease = Multi-Purpose

Quantity = Coat Generously

## SB10, SB15, & SB25 Series

| Specifications & Capacities | | | | | |
|---|---|---|---|---|---|
| **Model No.** | **Units** | **SB1051** | **SB1064** | **SB1574** | **SB2584** |
| **Working width** | in (m) | 51 (1.30) | 64 (1.63) | 74 (1.88) | 84 (2.13) |
| **Overall width with inner skid shoes** | in (m) | 52 3/4 (1.34) | 65 3/4 (1.67) | 75 3/4 (1.92) | 85 3/4 (2.18) |
| **Weight without options** | lbs (kg) | 400 (181.4) | 494 (224.1) | 640 (290.3) | 762 (345.6) |
| **Tractor horsepower** | hp (kW) | 18-32 (13.4-23.9) | 18-59 (13.4-44) | 30-59 (22.4-44) | 43-105 (32.1-78.3) |
| **3-Point hitch** | | Adjustable Cat. I | | Adjustable Cat. I | Adjustable Cat. I & II |
| **Quick hitch compatible** | | yes | Yes | yes | |
| **Main housing material** | gauge (mm) | 12 (2.7) | | 12 (2.7) | |
| **Side plate material** | in (mm) | 3/16 (5) | | 3/16 (5) | |
| **Chute opening at the base** | in (cm) | 8 (20.3) | | 10 (25.4) | 12 (30.5) |
| **Impeller diameter** | in (cm) | 20 (50.8) | | 24 (61) | |
| **Impeller housing depth** | in (cm) | 6 (15.2) | | 8 (20.3) | 10 (25.4) |
| **Number of impeller blades** | | 4 | | 4 | |
| **Auger diameter** | in (cm) | 14(35.6) | | 16 (40.6) | |
| **Number of auger paddles** | | 2 | 4 | 4 | |
| **Gearbox oil capacity & type** | pints (L) | 1.06 (.50) of SAE90W Gearlube | | 2.54 (1.2) of SAE 90W Gearlube | |
| **Drive chain** | | #60 RC | | #60 RC | |
| **Driveline category** | | Cat. II, shear bolt protected | | Cat. III, shear bolt protected | |
| **Driveline shear bolt** | | M8 x 50 C1.6.6 | | M8 x 50 C1.6.6 | M10 x 60 C1.6.6 |
| **Drive shaft shear bolt** | | 1/4" -20 Grade 5 bolt | | 1/4" -20 Grade 5 bolt | |
| **Optional Equipment** | | | | | |
| **Lower wear bar Construction** | | Bolt-on, reversible, and replaceable full length lower wear bar<br>Two options available: Hardened steel wear bar option or steel wear bar option | | | |
| **Weight** | lbs (kg) | 11 (5.0) | 14 (6.4) | 16 (7.3) | 18 (8.2) |
| **Outer skid shoe & weight**<br>**Outer wear bar & weight**<br>**Inner skid shoe & weight** | lbs (kg) | Bolt-on, adjustable & replaceable [8 (3.6)]<br>Bolt-on, adjustable & replaceable [4 (1.8)]<br>In-board mounted on the rear, adjustable and replaceable [19 (8.6)] | | | |
| **Chute rotation & weight Manual**<br>**Electric**<br>**Hydraulic** | lbs (kg) | Gear & worm drive [10 (4.5)]<br>Gear drive [20 (9.1)]<br>Gear drive [12 (5.4)] | | | |
| **Deflector type & weight Manual**<br>**Electric**<br>**Hydraulic** | lbs (kg) | Lock bar [2 (0.9)]<br>Electric actuator [25 (11.3)]<br>Hydraulic cylinder [32 (14.5)] | | | |

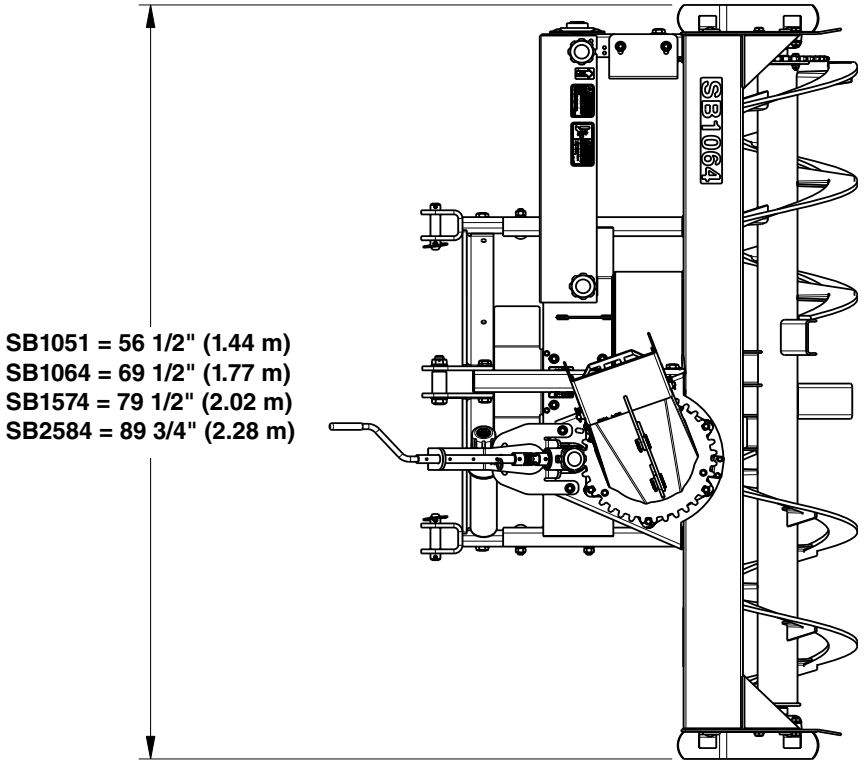
SB1064
SB1051 = 56 1/2" (1.44 m)
SB1064 = 69 1/2" (1.77 m)
SB1574 = 79 1/2" (2.02 m)
SB2584 = 89 3/4" (2.28 m)

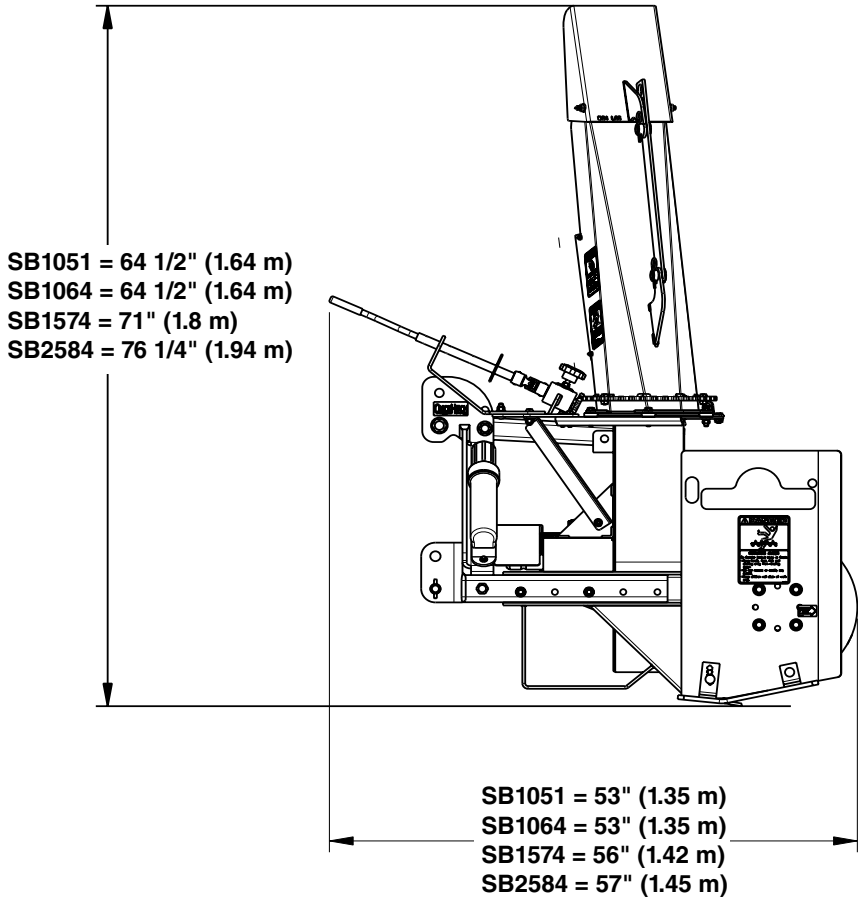
SB1051 = 64 1/2" (1.64 m)
SB1064 = 64 1/2" (1.64 m)
SB1574 = 71" (1.8 m)
SB2584 = 76 1/4" (1.94 m)
SB1051 = 53" (1.35 m)
SB1064 = 53" (1.35 m)
SB1574 = 56" (1.42 m)
SB2584 = 57" (1.45 m)

37107

## SB10, SB15, & SB25 Series

| Features | Benefits |
|---|---|
| **Quality Comer gearbox** | Provides long life, durable construction. |
| **Greasable bearings** | Less drag and extends life of unit. |
| **Adjustable 3-point hitch** | Operator may set the distance between tractor and Snow Blower to his/her preference. |
| **Quick Hitch compatible** | Makes for faster and easier hook-up to tractor. |
| **Large main housing** | Ability to handle large drifts. |
| **Large impeller diameter** | The ability to move and throw material farther. |
| **Guarded discharge chute** | Guards against operator putting his or her hands into the impeller. |
| **Options** | |
| **Bolt-on reversible lower wear bar** | Protects against wear on the auger housing and improves service life of the Snow Blower. The optional hardened steel wear bar last longer. |
| **Gear driven chute rotator** | Allows choice of three rotator options: manual drive, electric actuator, or hydraulic motor. |
| **shear bolt protected impeller and auger** | Eliminates costly repairs. |
| **Three skid shoe options** | Multiple surfaces allows you to pick the correct skid shoe for your application. |

## Troubleshooting Chart

| Problem | Cause | Solution |
|---|---|---|
| **Auger and/or impeller stalls (will not turn)** | Obstacles are entangled in auger and/or blower housing. | Shut Snow Blower down and manually clear auger and impeller housing. |
| | Driveline or drive shaft shear bolt has sheared. | Replace shear bolt. Refer to **"Shear Bolt Protection"** on page 39. |
| | Impeller key has sheared or fallen out. | Replace impeller key. |
| **Bottom of auger housing is wearing.** | Snow Blower was purchased without the optional bolt-on wear bar | Install the optional bolt-on wear bar. |
| | Optional bolt-on wear bar is worn. | Reverse or replace optional wear bar. |
| **Discharge chute won't rotate** | Ice build-up around base of discharge chute. | Remove ice. |
| | Wire harness connections are loose. | Reconnect wire harness connections. |
| | Solenoid is not operating properly. | Have solenoid inspected and repaired. |
| | Hydraulic hose has a break. | Replace hydraulic hose. |
| | Hydraulic hose has an obstruction. | Remove obstruction or replace hose. |
| | Hydraulic line is pinched. | Fix pinched line. |
| **Discharge chute is plugging** | Ground speed is too fast. | Decrease ground speed. |
| | Auger motor speed is too fast. | Decrease motor speed at the flow control valve. |
| **Discharge chute throws snow at the operator** | Rotational stop bolts are on the wrong side of the rotational stop. | Remove rotational stop. Rotate chute to throw snow straight forward. Reattach rotational stop. |
| **Discharge spout does not throw snow the preferred distance** | Discharge spout is set at the wrong angle. | Extend hydraulic cylinder to shorten throwing distance. Retract hydraulic cylinder to lengthen throwing distance. |
| **Impeller is throwing small amounts of snow** | Not enough snow to fill the impeller. | This is normal when clearing snow fall that is not very deep. |
| | Operating Snow Blower below recommended power take-off speed of 540 rpm. | Operate Snow Blower at recommended power take-off speed. |
| | Ground speed is too slow. | Increase ground speed. |
| **Skid shoes are wearing too fast** | Snow Blower is not parallel to ground. | Level Snow Blower. |
| **Snow Blower makes intermittent clicking noise** | Auger flighting is bent or broken. | Repair or replace damaged auger. |
| | Impeller blades are bent or broken. | Repair or replace damaged impeller blades. |
| **Snow Blower makes excessive noises or vibrates excessively** | Auger is contacting the ground. | Adjust Snow Blower to operate level. (Parallel with the ground.) |
| | Blowing dirty snow or refrozen melted snow. | Blow only clean fresh snow. |
| | Picking up road gravel and/or crushed rock. | Lower skid shoes to carry grader blade above road gravel and crushed rock. |
| | Obstacles are entangled in auger and/or impeller housing. | Shut Snow Blower down and manually clear auger and/or impeller housing. |
| | End bearing is worn or damaged. | Replace end bearing. |
| | Auger is bent or broken. | Repair or replace damaged auger. |
| | Impeller blades are bent or broken. | Repair or replace damaged blades. |
| **Snow is left on the ground** | Skid shoes are set too low. | Raise skid shoes up. |

# Torque Values Chart for Common Bolt Sizes

| Bolt Size (inches) | Bolt Head Identification Grade 2 | | Grade 5 | | Grade 8 | |
|---|---|---|---|---|---|---|
| in-tpi [1] | N · m [2] | ft-lb [3] | N · m | ft-lb | N · m | ft-lb |
| 1/4" - 20 | 7.4 | 5.6 | 11 | 8 | 16 | 12 |
| 1/4" - 28 | 8.5 | 6 | 13 | 10 | 18 | 14 |
| 5/16" - 18 | 15 | 11 | 24 | 17 | 33 | 25 |
| 5/16" - 24 | 17 | 13 | 26 | 19 | 37 | 27 |
| 3/8" - 16 | 27 | 20 | 42 | 31 | 59 | 44 |
| 3/8" - 24 | 31 | 22 | 47 | 35 | 67 | 49 |
| 7/16" - 14 | 43 | 32 | 67 | 49 | 95 | 70 |
| 7/16" - 20 | 49 | 36 | 75 | 55 | 105 | 78 |
| 1/2" - 13 | 66 | 49 | 105 | 76 | 145 | 105 |
| 1/2" - 20 | 75 | 55 | 115 | 85 | 165 | 120 |
| 9/16" - 12 | 95 | 70 | 150 | 110 | 210 | 155 |
| 9/16" - 18 | 105 | 79 | 165 | 120 | 235 | 170 |
| 5/8" - 11 | 130 | 97 | 205 | 150 | 285 | 210 |
| 5/8" - 18 | 150 | 110 | 230 | 170 | 325 | 240 |
| 3/4" - 10 | 235 | 170 | 360 | 265 | 510 | 375 |
| 3/4" - 16 | 260 | 190 | 405 | 295 | 570 | 420 |
| 7/8" - 9 | 225 | 165 | 585 | 430 | 820 | 605 |
| 7/8" - 14 | 250 | 185 | 640 | 475 | 905 | 670 |
| 1" - 8 | 340 | 250 | 875 | 645 | 1230 | 910 |
| 1" - 12 | 370 | 275 | 955 | 705 | 1350 | 995 |
| 1-1/8" - 7 | 480 | 355 | 1080 | 795 | 1750 | 1290 |
| 1-1/8" - 12 | 540 | 395 | 1210 | 890 | 1960 | 1440 |
| 1-1/4" - 7 | 680 | 500 | 1520 | 1120 | 2460 | 1820 |
| 1-1/4" - 12 | 750 | 555 | 1680 | 1240 | 2730 | 2010 |
| 1-3/8" - 6 | 890 | 655 | 1990 | 1470 | 3230 | 2380 |
| 1-3/8" - 12 | 1010 | 745 | 2270 | 1670 | 3680 | 2710 |
| 1-1/2" - 6 | 1180 | 870 | 2640 | 1950 | 4290 | 3160 |
| 1-1/2" - 12 | 1330 | 980 | 2970 | 2190 | 4820 | 3560 |

| Bolt Size (Metric) | Bolt Head Identification 5.8 Class 5.8 | | 8.8 Class 8.8 | | 10.9 Class 10.9 | |
|---|---|---|---|---|---|---|
| mm x pitch [4] | N · m | ft-lb | N · m | ft-lb | N · m | ft-lb |
| M 5 X 0.8 | 4 | 3 | 6 | 5 | 9 | 7 |
| M 6 X 1 | 7 | 5 | 11 | 8 | 15 | 11 |
| M 8 X 1.25 | 17 | 12 | 26 | 19 | 36 | 27 |
| M 8 X 1 | 18 | 13 | 28 | 21 | 39 | 29 |
| M10 X 1.5 | 33 | 24 | 52 | 39 | 72 | 53 |
| M10 X 0.75 | 39 | 29 | 61 | 45 | 85 | 62 |
| M12 X 1.75 | 58 | 42 | 91 | 67 | 125 | 93 |
| M12 X 1.5 | 60 | 44 | 95 | 70 | 130 | 97 |
| M12 X 1 | 90 | 66 | 105 | 77 | 145 | 105 |
| M14 X 2 | 92 | 68 | 145 | 105 | 200 | 150 |
| M14 X 1.5 | 99 | 73 | 155 | 115 | 215 | 160 |
| M16 X 2 | 145 | 105 | 225 | 165 | 315 | 230 |
| M16 X 1.5 | 155 | 115 | 240 | 180 | 335 | 245 |
| M18 X 2.5 | 195 | 145 | 310 | 230 | 405 | 300 |
| M18 X 1.5 | 220 | 165 | 350 | 260 | 485 | 355 |
| M20 X 2.5 | 280 | 205 | 440 | 325 | 610 | 450 |
| M20 X 1.5 | 310 | 230 | 650 | 480 | 900 | 665 |
| M24 X 3 | 480 | 355 | 760 | 560 | 1050 | 780 |
| M24 X 2 | 525 | 390 | 830 | 610 | 1150 | 845 |
| M30 X 3.5 | 960 | 705 | 1510 | 1120 | 2100 | 1550 |
| M30 X 2 | 1060 | 785 | 1680 | 1240 | 2320 | 1710 |
| M36 X 3.5 | 1730 | 1270 | 2650 | 1950 | 3660 | 2700 |
| M36 X 2 | 1880 | 1380 | 2960 | 2190 | 4100 | 3220 |

[1] in-tpi = nominal thread diameter in inches-threads per inch

[2] N· m = newton-meters

[3] ft-lb= foot pounds

[4] mm x pitch = nominal thread diameter in millimeters x thread pitch

Torque tolerance + 0%, -15% of torquing values. Unless otherwise specified use torque values listed above.
All locknuts or lubricated fasteners: Use 75% of torque value. (i.e. 1/2"-13 GR5 = 76 ft-lb; 75% of 76 or .75 x 76 = 57 ft-lb)

## Additional Torque Values

| | |
|---|---|
| **Drive Shaft Shear Bolt** | 25 ft-lbs (See page 39) |
| **SB10 & SB15 Driveline Shear Bolt** | 19 ft-lbs (See page 39) |
| **SB25 Driveline Shear Bolt** | 39 ft-lbs (See page 39) |

## Warranty

Land Pride warrants to the original purchaser that this Land Pride product will be free from defects in material and workmanship beginning on the date of purchase by the end user according to the following schedule when used as intended and under normal service and conditions for personal use.

**Overall Unit:** One year Parts and Labor

Auger, Impeller, Wear Bars, & Skid Shoes: Considered wear items

This Warranty is limited to the repair or replacement of any defective part by Land Pride and the installation by the dealer of any such replacement part, and does not cover common wear items such as blades, belts, tines, etc. Land Pride reserves the right to inspect any equipment or parts which are claimed to have been defective in material or workmanship.

This Warranty does not apply to any part or product which in Land Pride's judgment shall have been misused or damaged by accident or lack of normal maintenance or care, or which has been repaired or altered in a way which adversely affects its performance or reliability, or which has been used for a purpose for which the product is not designed. Misuse also specifically includes failure to properly maintain oil levels, grease points, and driveline shafts.

Claims under this Warranty should be made to the dealer which originally sold the product and all warranty adjustments must be made through an authorized Land Pride dealer. Land Pride reserves the right to make changes in materials or design of the product at any time without notice.

This Warranty shall not be interpreted to render Land Pride liable for damages of any kind, direct, consequential, or contingent to property. Furthermore, Land Pride shall not be liable for damages resulting from any cause beyond its reasonable control. This Warranty does not extend to loss of crops, any expense or loss for labor, supplies, rental machinery or for any other reason.

**No other warranty of any kind whatsoever, express or implied, is made with respect to this sale; and all implied warranties of merchantability and fitness for a particular purpose which exceed the obligations set forth in this written warranty are hereby disclaimed and excluded from this sale.**

This Warranty is not valid unless registered with Land Pride within 30 days from the date of purchase.

**IMPORTANT:** The Online Warranty Registration should be completed by the dealer at the time of purchase. This information is necessary to provide you with quality customer service.

**Model Number** _____ **Serial Number** _____

**Corporate Office: P.O. Box 5060**
**Salina, Kansas 67402-5060 USA**
**www.landpride.com**