Table of Contents

Pasture Aerators

AR2596 & AR2510

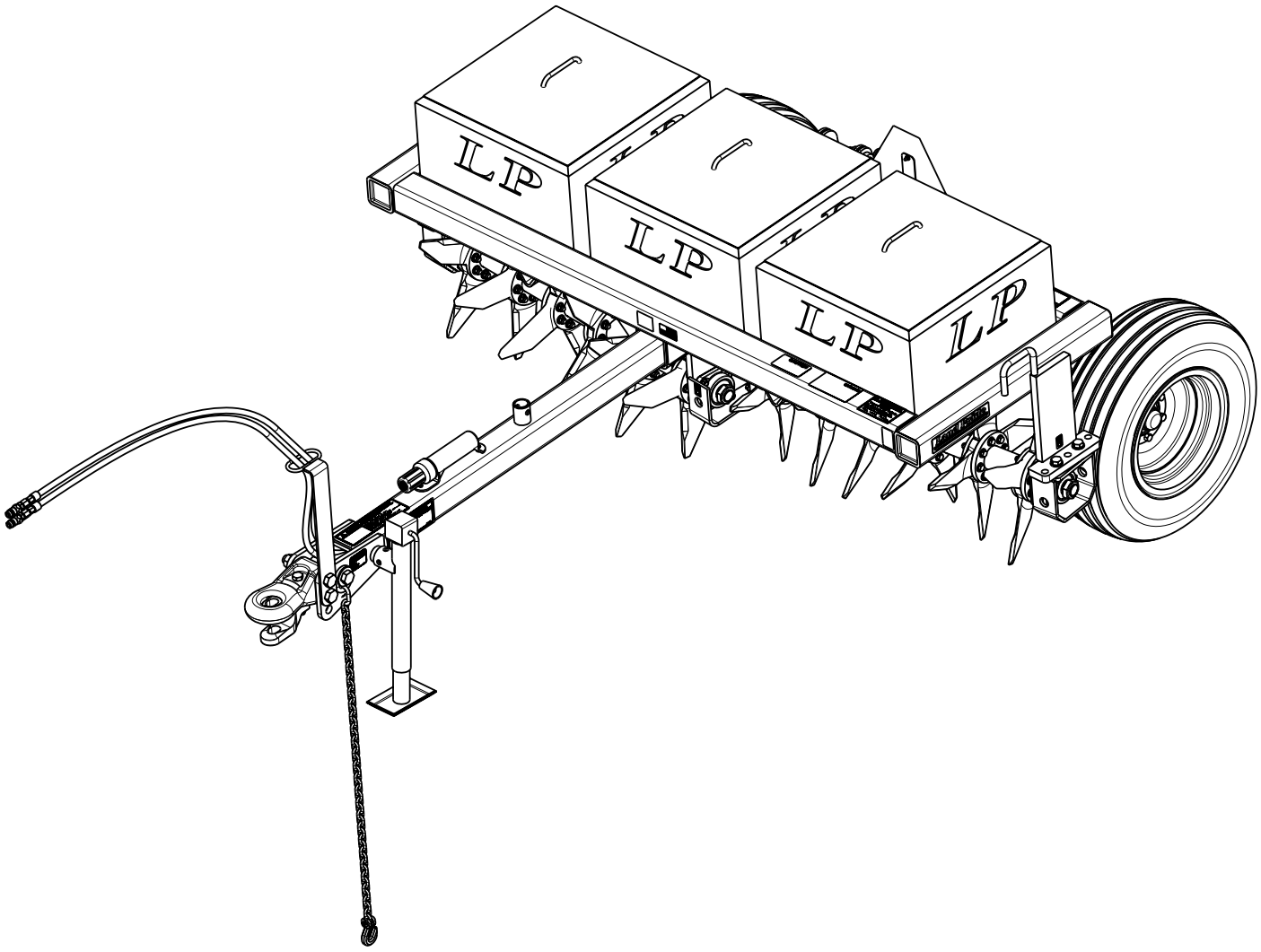

30018

325-127M
Operator's Manual

Read the Operator's Manual entirely. When you see this symbol, the subsequent instructions and warnings are serious - follow without exception. Your life and the lives of others depend on it!

Cover photo may show optional equipment not supplied with standard unit.

For an Operator's Manual and Decal Kit in French or Spanish Language, please see your Land Pride dealer.

Printed 5/6/19

Machine Identification

Record your machine details in the log below. If you replace this manual, be sure to transfer this information to the new manual.

If you, or the dealer, have added Options not originally ordered with the machine, or removed Options that were originally ordered, the weights and measurements are no longer accurate for your machine. Update the record by adding the machine weight and measurements provided in the Specifications & Capacities Section of this manual with the Option(s) weight and measurements.

Model Number	
Serial Number	
Machine Height	
Machine Length	
Machine Width	
Machine Weight	
Delivery Date	
First Operation	
Accessories	

Dealer Contact Information

Name: _____

Street: _____

City/State: _____

Telephone: _____

Email: _____

California Proposition 65

⚠ **WARNING**: Cancer and reproductive harm - www.P65Warnings.ca.gov

Important Safety Information 1
Safety at All Times 1
Look for the Safety Alert Symbol 1
Safety Labels 4
Introduction 7
Application 7
Using This Manual 7
Terminology 7
Owner Assistance 7
Further Assistance 7
Section 1: Assembly & Set-up 8
Tractor Requirements 8
Torque Requirements 8
Dealer Set-up 8
Tongue Assembly 8
Transport Wheel Assembly 8
Rear Axle and Lift Cylinder Assembly 10
Slow Moving Vehicle Sign (SMV) 11
Section 2: Options & Accessories 12
Rear Hitch Assembly (Accessory) 12
Concrete Weights (Optional) 12
Mounting 2 Concrete Blocks 12
Mounting 3 Concrete Blocks 12
Mounting 4 Concrete Blocks 12
Tie Down Concrete Blocks 13
Drag Harrow Carrier (Optional) 14
Slow Moving Vehicle Sign Accessory 15
Drag Harrow (Stand Alone Unit) 16
Drag Harrow Assembly 16
Hook-up To Rear Level Hitch 16
Hook-up To Drag Harrow Carrier 16
Section 3: Adjustments 17
Hitch Height 17
Rotor Tine Gang Angle 17
Section 4: Operating Procedures 18
Operator's Responsibilities 18
Operator Safety 18
Hook-Up Aerator To Transport 19
Transport Aerator 20
Set-Up For Field Work 21
Equipment Operating Safety 21
Unhook Aerator 22
Tractor Shutdown Procedure 22
General Operation Instructions 23
Section 5: Maintenance & Lubrication 24
Introduction 24
Hydraulic System 24
Tine Replacement 24
Long-Term Storage 26
Ordering Replacement Parts 26
Lubrication Points 27
Tine Gang Hanger Bearings 27
Rear Axle Pivot Pins 27
Wheel Hub 27
Section 6: Specifications & Capacities 28
Section 7: Features & Benefits 30
Section 8: Troubleshooting 31
Section 9: Torque & Tire Inflation Charts . . . 32
Section 10: Warranty 33

© Copyright 2023 All rights Reserved

Land Pride provides this publication "as is" without warranty of any kind, either expressed or implied. While every precaution has been taken in the preparation of this manual, Land Pride assumes no responsibility for errors or omissions. Neither is any liability assumed for damages resulting from the use of the information contained herein. Land Pride reserves the right to revise and improve its products as it sees fit. This publication describes the state of this product at the time of its publication, and may not reflect the product in the future.

Land Pride is a registered trademark.

All other brands and product names are trademarks or registered trademarks of their respective holders.

Printed in the United States of America.

See previous page for Table of Contents.

Parts Manual QR Locator

The QR (Quick Reference) code on the left will take you to the Parts Manual for this equipment. Download the appropriate app on your smart phone. Scan the QR code and take a picture.G

Dealer QR Locator

The QR code on the left will link you to available dealers for Land Pride products. Refer to Parts Manual QR Locator on this page for detailed instructions.

Listed below are common practices that may or may not be applicable to the products described in this manual.

Safety at All Times

Careful operation is your best assurance against an accident.

All operators, no matter how much experience they may have, should carefully read this manual and other related manuals before operating the power machine and this implement.

- ▲ Thoroughly read and understand the "Safety Label" section. Read all instructions noted on them.
- ▲ Do not operate the equipment while under the influence of drugs or alcohol, as they impair your ability to safely and properly operate the equipment.
- ▲ The operator should be familiar with all functions of the tractor and attached implement, and be able to handle emergencies quickly.
- ▲ Make sure all guards and shields appropriate for the operation are in place and secured before operating the implement.
- ▲ Keep all bystanders away from equipment and work area.
- ▲ Start tractor from the driver's seat with hydraulic controls in neutral.
- ▲ Operate tractor and controls from the driver's seat only.
- ▲ Never dismount from a moving tractor or leave tractor unattended with engine running.
- ▲ Do not allow anyone to stand between the implement and tractor while backing up to the implement.
- ▲ Keep hands, feet, and clothing away from power-driven parts.
- ▲ While transporting and operating equipment, watch out for objects overhead and along the sides such as fences, trees, buildings, wires, etc.
- ▲ Do not turn tractor so tight as to cause hitched implement to ride up on the tractor's rear wheel.
- ▲ Store implement in a safe and secure area where children normally do not play. When needed, secure implement against falling with support blocks.

Look for the Safety Alert Symbol

The SAFETY ALERT SYMBOL indicates there is a potential hazard to personal safety and extra precaution must be taken. When you see this symbol, be alert and carefully read the message that follows it. Hazard control, and accident prevention are dependent upon the awareness, concern, prudence, and proper training of personnel involved in the operation, transport, maintenance, and storage of equipment.

Be Aware of Signal Words

A signal word designates a degree or level of hazard seriousness. They are:

DANGER: Indicates a hazardous situation that, if not avoided, will result in death or serious injury.

WARNING: Indicates a hazardous situation that, if not avoided, could result in death or serious injury.

CAUTION: Indicates a hazardous situation that, if not avoided, may result in minor or moderate injury.

Be Aware of Special Notices

Special notices are intended to point out important and helpful information that should be followed. They are usually placed inside a box. They are:

IMPORTANT: Indicates that equipment or property damage could result if instructions are not followed.

NOTE: Indicates supplementary explanations that will be helpful when using the equipment.

Safety Precautions for Children

Tragedy can occur if the operator is not alert to the presence of children, Children generally are attracted to implements and their work.

- ▲ Never assume children will remain where you last saw them.
- ▲ Keep children out of the work area and under the watchful eye of a responsible adult.
- ▲ Be alert and shut the implement and tractor down if children enter the work area.
- ▲ Never carry children on the tractor or implement. There is not a safe place for them to ride. They may fall off and be run over or interfere with the control of the power machine.
- ▲ Never allow children to operate the power machine, even under adult supervision.
- ▲ Never allow children to play on the power machine or implement.
- ▲ Use extra caution when backing up. Before the tractor starts to move, look down and behind to make sure the area is clear.

Tractor Shutdown & Storage

- ▲ If engaged, disengage power take-off.
- ▲ Park on solid, level ground and lower implement to ground or onto support blocks.
- ▲ Put tractor in park or set park brake.
- ▲ Turn off engine and remove ignition key to prevent unauthorized starting.
- ▲ Relieve all hydraulic pressure to auxiliary hydraulic lines.
- ▲ Wait for all components to stop before leaving operator's seat.
- ▲ Use steps, grab-handles and anti-slip surfaces when stepping on and off the tractor.

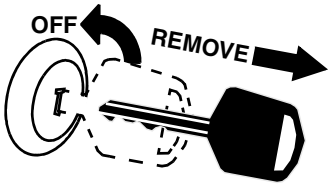

Listed below are common practices that may or may not be applicable to the products described in this manual.

Use A Safety Chain

- ▲ A safety chain will help control drawn machinery should it separate from the tractor drawbar.
- ▲ Use a chain with the strength rating equal to or greater than the gross weight of the towed implement.
- ▲ Attach the chain to the tractor drawbar support or other specified anchor location. Allow only enough slack in the chain to permit turning.
- ▲ Always hitch the implement to the machine towing it. Do not use the safety chain to tow the implement.

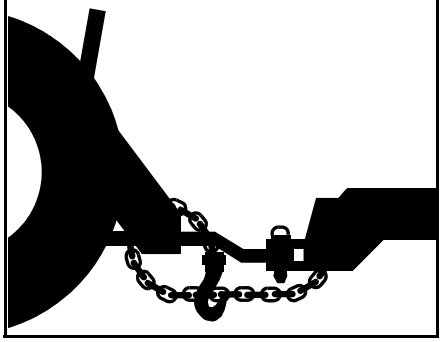

Towing Safely

- ▲ Comply with federal, state, and local laws.
- ▲ Use towing vehicle and trailer of adequate size and capacity. Secure equipment towed on a trailer with chocks, tie downs, and chains.
- ▲ **IMPORTANT:** Do not tow a load that is more than double the weight of the vehicle towing the load.
- ▲ Sudden braking can cause a towed trailer to swerve unexpectedly. Reduce speed if trailer is not equipped with brakes.

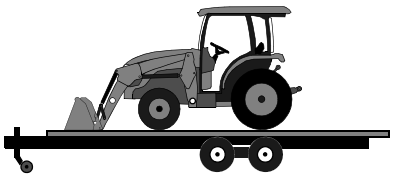

Transport Safely

- ▲ Comply with federal, state, and local laws.
- ▲ Avoid contact with any overhead utility lines or electrically charged conductors.
- ▲ Engage park brake when stopped on an incline.
- ▲ Maximum transport speed for an implement is 20 mph (32 km/h). DO NOT EXCEED.
- ▲ Never travel at a speed which does not allow adequate control of steering and stopping. Some rough terrains require a slower speed. Sudden braking can cause a towed load to swerve and upset.
- ▲ Do not tow an implement that, when fully loaded, weights more than 1.5 times the weigh of towing vehicle.

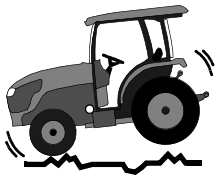

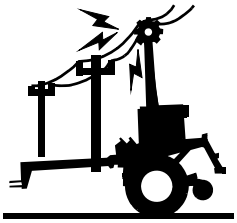

Tire Safety

- ▲ Tire changing can be dangerous and must be performed by trained personnel using the correct tools and equipment.
- ▲ Always properly match the wheel size to the properly sized tire.
- ▲ Always maintain correct tire pressure. Do not inflate tires above recommended pressures shown in the Operator's Manual.
- ▲ When inflating tires, use a clip-on chuck and extension hose long enough to allow you to stand to one side and NOT in front of or over the tire assembly. Use a safety cage if available.
- ▲ Securely support the implement when changing a wheel.
- ▲ When removing and installing wheels, use wheel handling equipment adequate for the weight involved.
- ▲ Make sure wheel bolts have been tightened to the specified torque.

Practice Safe Maintenance

- ▲ Understand procedure before doing work. Refer to the Operator's Manual for additional information.
- ▲ Work on a level surface in a clean dry area that is well-lit.
- ▲ Lower implement to the ground and follow all shutdown procedures before leaving the operator's seat to perform maintenance.
- ▲ Do not work under any hydraulically supported equipment. It can settle, suddenly leak down, or be lowered accidentally. If it is necessary to work under the equipment, securely support it with stands or suitable blocking beforehand.
- ▲ Use properly grounded electrical outlets and tools.
- ▲ Use correct tools and equipment for the job that are in good condition.
- ▲ Allow equipment to cool before working on it.
- ▲ Disconnect battery ground cable (-) before servicing or adjusting electrical systems or before welding on implement.
- ▲ Inspect all parts. Make certain parts are in good condition & installed properly.
- ▲ Replace parts on this implement with genuine Land Pride parts only. Do not alter this implement in a way which will adversely affect its performance.
- ▲ Do not grease or oil implement while it is in operation.
- ▲ Remove buildup of grease, oil, or debris.
- ▲ Always make sure any material and waste products from the repair and maintenance of the implement are properly collected and disposed.
- ▲ Remove all tools and unused parts from equipment before operation.
- ▲ Do not weld or torch on galvanized metal as it will release toxic fumes.

Listed below are common practices that may or may not be applicable to the products described in this manual.

Prepare for Emergencies

- ▲ Be prepared if a fire starts.
- ▲ Keep a first aid kit and fire extinguisher handy.
- ▲ Keep emergency numbers for doctor, ambulance, hospital, and fire department near the phone.

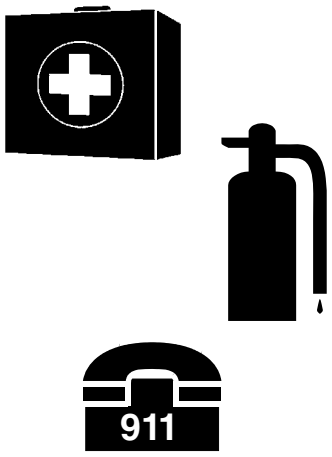

Wear Personal Protective Equipment (PPE)

- ▲ Wear protective clothing and equipment appropriate for the job such as safety shoes, safety, glasses, hard hat, dust mask, and ear plugs.
- ▲ Clothing should fit snug without fringes and pull strings to avoid entanglement with moving parts.
- ▲ Prolonged exposure to loud noise can cause hearing impairment or hearing loss. Wear suitable hearing protection such as earmuffs or earplugs.
- ▲ Operating a machine safely requires the operator's full attention. Avoid wearing headphones while operating equipment.

Avoid High Pressure Fluids

- ▲ Escaping fluid under pressure will penetrate the skin or eyes causing serious injury.
- ▲ Relieve all residual pressure before disconnecting hydraulic lines or performing work on the hydraulic system.
- ▲ Make sure all hydraulic fluid connections are properly tightened/torqued and all hydraulic hoses and lines are in good condition before applying pressure to the system.
- ▲ Use a piece of paper or cardboard, NOT BODY PARTS, to check for suspected leaks.
- ▲ Wear protective gloves and safety glasses or goggles when working with hydraulic systems.
- ▲ **DO NOT DELAY.** If an accident occurs, seek immediate emergency medical care or gangrene may result.

Use Safety Lights and Devices

- ▲ A slow moving power machine can create a hazard when driven on public roads. They are difficult to see, especially at night.
- ▲ Flashing warning lights and turn signals are recommended whenever driving on public roads.
- ▲ For tractors and other agriculture equipment, a Slow Moving Vehicle (SMV) sign is required when traveling on public roads.

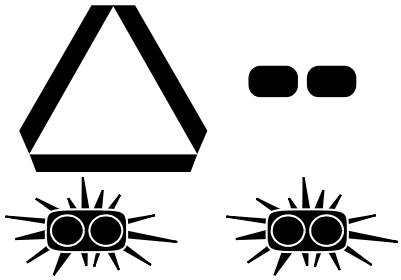

Use Seat Belt and ROPS

- ▲ Land Pride recommends the use of a CAB or roll-over-protective-structures (ROPS) and seat belt in almost all power machines. Combination of a CAB or ROPS and seat belt will reduce the risk of serious injury or death if the power machine should be upset.
- ▲ If ROPS is in the locked-up position, fasten seat belt snugly and securely to help protect against serious injury or death from falling and machine overturn.

Keep Riders Off Machinery

- ▲ Never carry riders on the tractor or implement.
- ▲ Riders obstruct operator's view and interfere with the control of the power machine.
- ▲ Riders can be struck by objects or thrown from the equipment.
- ▲ Never use the tractor or implement to lift or transport riders.

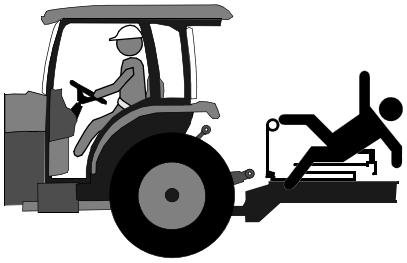

Listed below are common practices that may or may not be applicable to the products described in this manual.

Avoid Crystalline Silica (Quartz) Dust

Because crystalline silica is a basic component of sand and granite, many activities at construction sites produce dust containing crystalline silica. Trenching, sawing, and boring of material containing crystalline silica can produce dust containing crystalline silica particles. This dust can cause serious injury to the lungs (silicosis).

There are guidelines which should be followed if crystalline silica (quartz) is present in the dust.

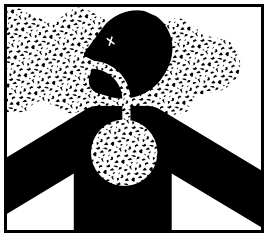

- ▲ Be aware of and follow OSHA (or other local, State, or Federal) guidelines for exposure to airborne crystalline silica.
- ▲ Know the work operations where exposure to crystalline silica may occur.
- ▲ Participate in air monitoring or training programs offered by the employer.
- ▲ Be aware of and use optional equipment controls such as water sprays, local exhaust ventilation, and enclosed cabs with positive pressure air conditioning if the machine has such equipment. Otherwise respirators shall be worn.
- ▲ Where respirators are required, wear a respirator approved for protection against crystalline silica containing dust. Do not alter respirator in any way. Workers who use tight-fitting respirators can not have beards/ mustaches which interfere with the respirator seal to the face.
- ▲ If possible, change into disposable or washable work clothes at the work site; shower and change into clean clothing before leaving the work site.
- ▲ Do not eat, drink, use tobacco products, or apply cosmetics in areas where there is dust containing crystalline silica.
- ▲ Store food, drink, and personal belongings away from the work area.
- ▲ Wash hands and face before eating, drinking, smoking, or applying cosmetics after leaving the exposure area.

Handle Chemicals Properly

- ▲ Protective clothing should be worn.
- ▲ Handle all chemicals with care.
- ▲ Follow instructions on container label.
- ▲ Agricultural chemicals can be dangerous. Improper use can seriously injure persons, animals, plants, soil, and property.
- ▲ Inhaling smoke from any type of chemical fire can be a serious health hazard.
- ▲ Store or dispose of unused chemicals as specified by the chemical manufacturer.

Dig Safe - Avoid Underground Utilities

- ▲ USA: Call 811
  CAN:
  http://www.clickbeforeyoudig.com
- ▲ Always contact your local utility companies (electrical, telephone, gas, water, sewer, and others) before digging so that they may mark the location of any underground services in the area.
- ▲ Be sure to ask how close you can work to the marks they positioned.

This page left blank intentionally.

Safety Labels

Your Pasture Aerator comes equipped with all safety labels in place. They were designed to help you safely operate your implement. Read and follow their directions.

1. *Keep all safety labels clean and legible.*
2. *Refer to this section for proper label placement. Replace all damaged or missing labels. Order new labels from your nearest Land Pride dealer. To find your nearest dealer, visit our dealer locator at www.landpride.com.*
3. *Some new equipment installed during repair requires safety labels to be affixed to the replaced component as specified by Land Pride. When ordering new components make sure the correct safety labels are included in the request.*
4. *Refer to this section for proper label placement.*
   To install new labels:
   a. *Clean area where label is to be placed.*
   b. *Spray soapy water on the surface where label is to be placed.*
   c. *Peel backing from label. Press firmly onto the surface.*
   d. *Squeeze out air bubbles with edge of a credit card or with similar type straight edge.*

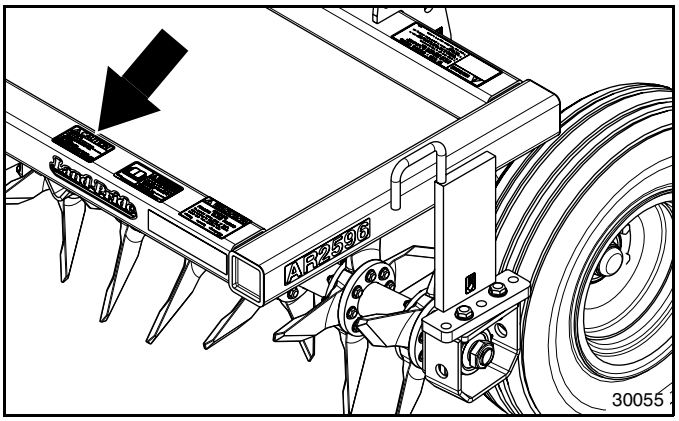

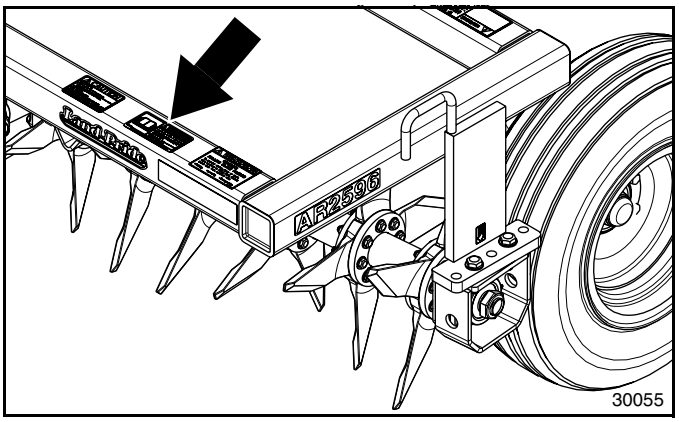

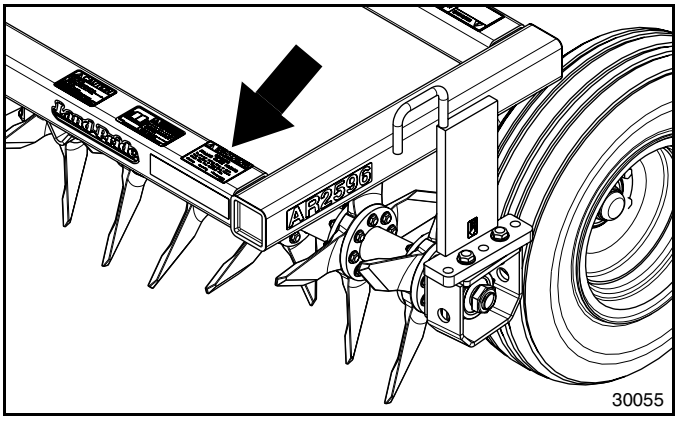

818-719C
Caution: Read Operator's Manual and List of Hazards
1 Place

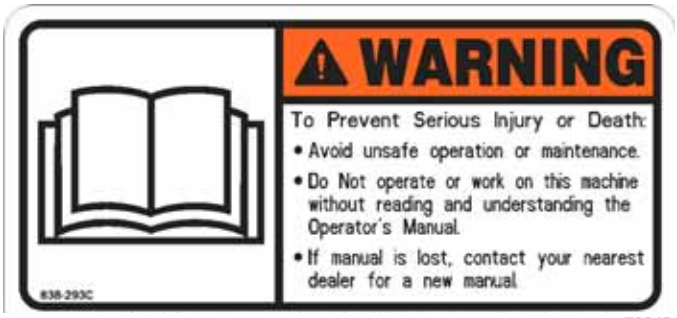

838-293C
Warning: Read Operator's Manual
1 Place

848-247C
Warning: Crushing Falling Blade Hazard
1 Place

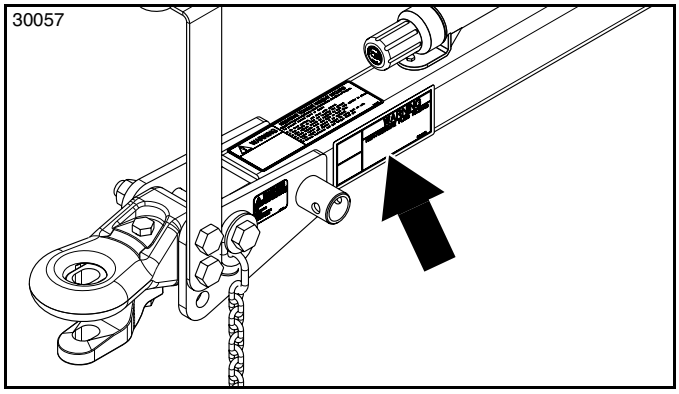

70659

818-831C

Warning: High Pressure Fluid Hazard

1 Place

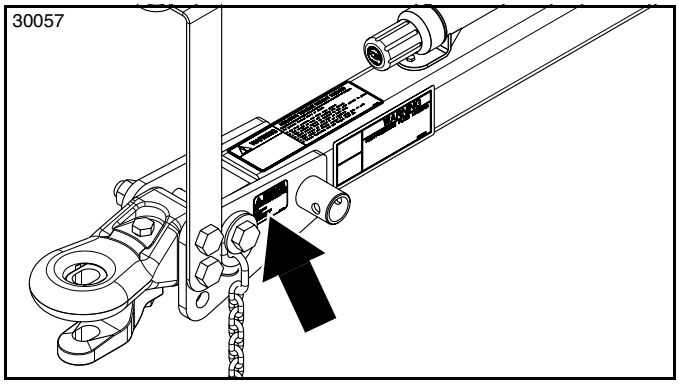

70412

838-588C

Warning: 20 MPH (32 km/h) Speed Limit

1 Place

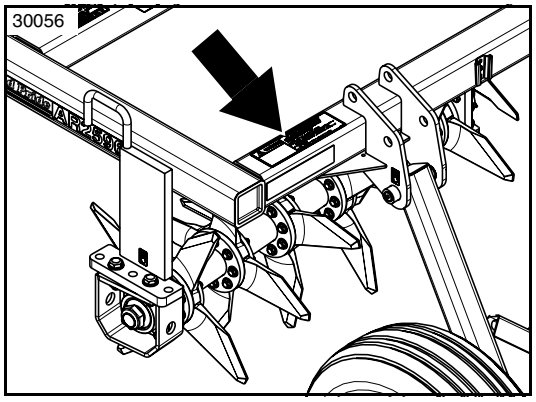

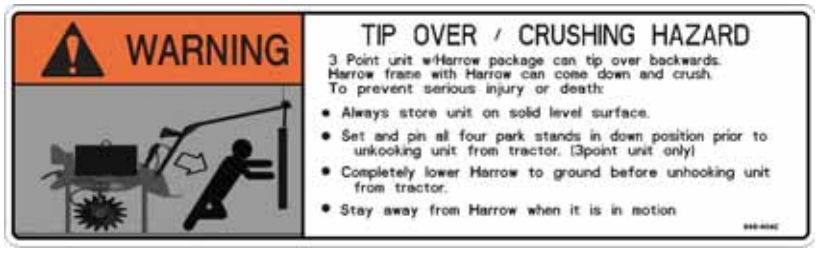

70573

848-404C

Warning: Tip Over and Crushing Hazards

1 Place

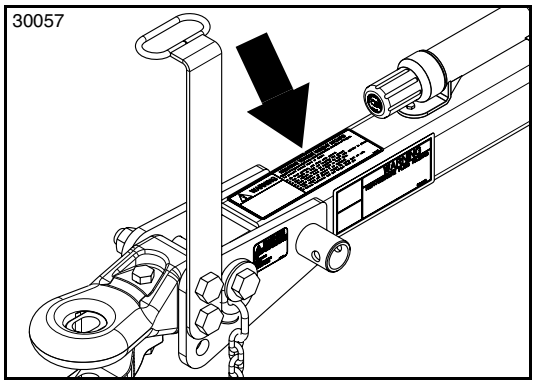

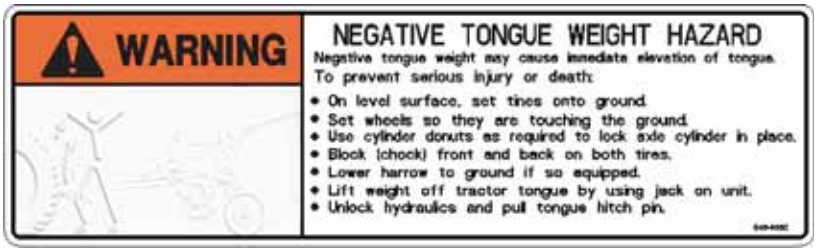

70513

848-403C

Warning: Negative Tongue Weight Hazard

1 Place

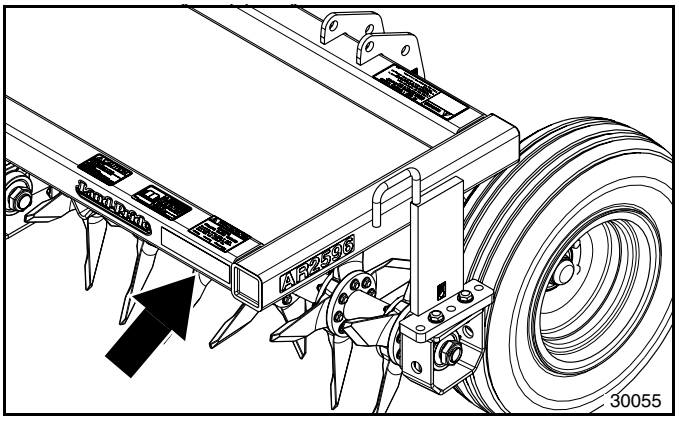

73138

838-615C

Amber Reflector: 2" x 9"

1 Place: On the front Left side of the aerator frame

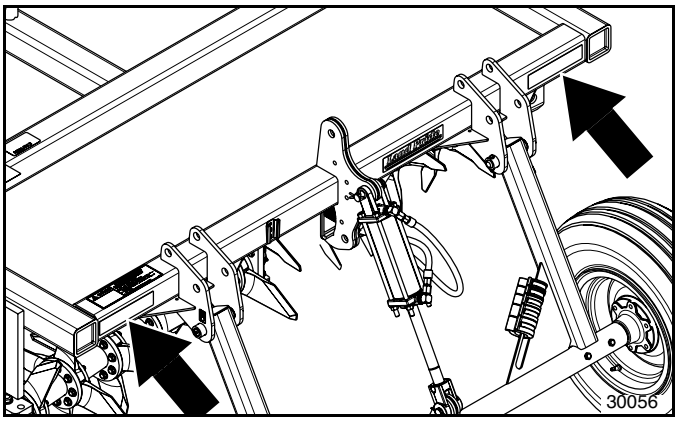

838-614C

Red Reflector: 2" x 9"

2 Places: On the back of the aerator frame

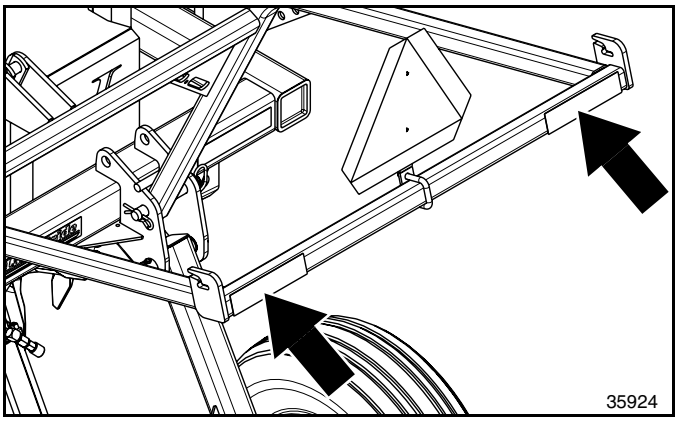

838-614C

Red Reflector: 2" x 9"

2 Places: On the back of the optional Drag Harrow Carrier

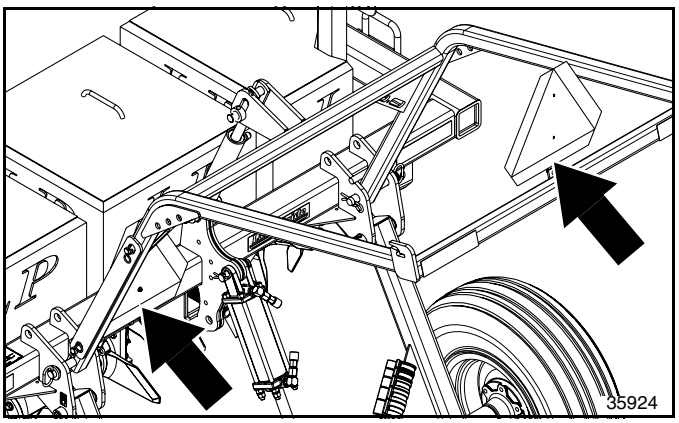

74890

818-055C

Slow Moving Vehicle Sign, Decal - Galvanized Back

1 Place: Back of Pasture Aerator

1 Place: Back of Optional Drag Harrow Carrier

Land Pride welcomes you to the growing family of new product owners. This Pasture Aerator has been designed with care and built by skilled workers using quality materials. Proper assembly, maintenance, and safe operating practices will help you get years of satisfactory use from this product

Application

The Land Pride 25 Series Pasture Aerators are pull type Aerators designed to hitch to a standard drawbar or a hammer strap type drawbar. They have uses and applications in agricultural conservation tillage and pasture renovations and are available in 8 ft (2.44m) and 10 ft (3.05 m) widths. The heavy duty knife like tines on the Aerator are designed with a twist in them to fracture compacted soil as they slice into the ground in a twisting fashion. This fracturing of the soil conditions the soil to soak-up run-off water faster, allow fertilizer to penetrate deeper into the ground and increase oxygen supply to the plant roots.

The twisted tines are constructed of hardened forged steel mounted on a heavy duty rotating shaft that can be angled up to 7 1/2° for an aggressive action. Optional concrete weights can be added to the Aerator to significantly increase down pressure on the tines.

See “**Specifications and Capacities**” on page 28 and “**Features and Benefits**” on page 30 for additional information and performance enhancing options.

Using This Manual

- This Operator’s Manual is designed to help familiarize the operator with safety, assembly, operation, adjustments, troubleshooting, and maintenance. Read this manual and follow the recommendations to help ensure safe and efficient operation.
- The information contained within this manual was current at the time of printing. Some parts may change slightly to assure you of the best performance.
- To order a new Operator’s or Parts Manual, contact your authorized dealer. Manuals can also be downloaded, free-of-charge, from our website at www.landpride.com

Terminology

“Right” or “Left” as used in this manual is determined by facing the direction the machine will operate while in use unless otherwise stated.

Owner Assistance

The dealer should complete the Online Warranty Registration at the time of purchase. This information is necessary to provide you with quality customer service.

The parts on your Pasture Aerator have been specially designed by Land Pride and should only be replaced with genuine Land Pride parts. Contact a Land Pride dealer if customer service or repair parts are required. Your Land Pride dealer has trained personnel, repair parts, and equipment needed to service the implement.

Serial Number

For quick reference and prompt service, record model and serial number on the inside cover page and again on the warranty page. Always provide model number and serial number when ordering parts and in all correspondences with your Land Pride dealer. For location of your serial number plate, see Figure 1.

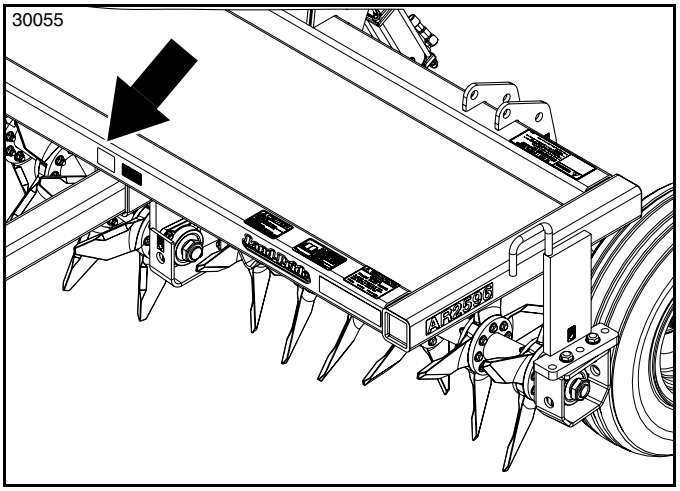

Serial Number Plate Location
Figure 1

Further Assistance

Your dealer wants you to be satisfied with your new Pasture Aerator. If for any reason you do not understand any part of this manual or are not satisfied with the service received, the following actions are suggested:

1. Discuss any problems you have with your implement with your dealership service personnel so they can address the problem.
2. If you are still not satisfied, seek out the owner or general manager of the dealership, explain the question/problem, and request assistance.
3. For further assistance write to:

Land Pride Service Department
1525 East North Street
P.O. Box 5060
Salina, Ks. 67402-5060

E-mail address
lpservicedept@landpride.com

Tractor Requirements

The tractor horsepower and weight must be capable of controlling the Aerator under all operating conditions. Tractors smaller or larger than the rated horsepower range must not be used.

Horsepower rating . . . . . .40-250 hp (30-186 kW)
Hitch. . . .Standard drawbar or hammer strap drawbar
Tractor weight. . . . . .See Warning below

WARNING

To avoid serious injury or death:

Lightweight tractors with rear attached implements may need weights added to the front to maintain steering control. Consult your tractor Operator's Manual to determine weight requirements and maximum limitations.

Torque Requirements

Refer to "Torque Values Chart"page 32 to determine correct torque values when tightening hardware.

Dealer Set-up

The pull type Aerator is shipped partially assembled. Some components will need be assembled at the dealership.

WARNING

To avoid serious injury or death:

The Aerator is top heavy. Make sure Aerator is properly supported under the upper square tube frame to keep unit from rotating on its tines during assembly and set-up. Otherwise, the unit could rotate and cause serious injury.

Tongue Assembly

Refer to Figure 1-1 on page 9:

1. Apply silicone caulk to the surfaces on the plastic plugs (#5) that mate with square tube ends where the plugs are to be inserted into. (Silicone caulk supplied by customer.)
2. Insert plastic plugs (#5) into the four square tube openings at the four corners of the main frame.
3. Insert tongue (#2) approximately 34" (86 cm) into receiver opening (#1).

IMPORTANT: Clevis pin (#4) must be inserted from the right side as shown in Figure 1-1.

4. Attach tongue to the receiver tube by inserting 1" x 5" clevis pin (#4) from the right side. Secure clevis pin with cotter pin (#3). Bend one or more legs of the cotter pin to keep it from falling out.
5. Remove jack stand (#7) from top mount stob "A" and attach to side mount stob "B" with detent pin (#6). Make sure pin is fully inserted.

Transport Wheel Assembly

Refer to Figure 1-2 on page 9:

1. Orient transport wheels (#1) with valve stems (#8) facing in towards the center.
2. Attach transport wheels to axle hubs (#7) with lug bolts (#4). Tighten bolts to the correct torque.
3. Attach cylinder stop (#2) to rear axle with wire retaining pin (#5). Make sure wire retainer is secured over the pin.
4. Attach five cylinder stops (#6) to the other rear axle gusset plate.

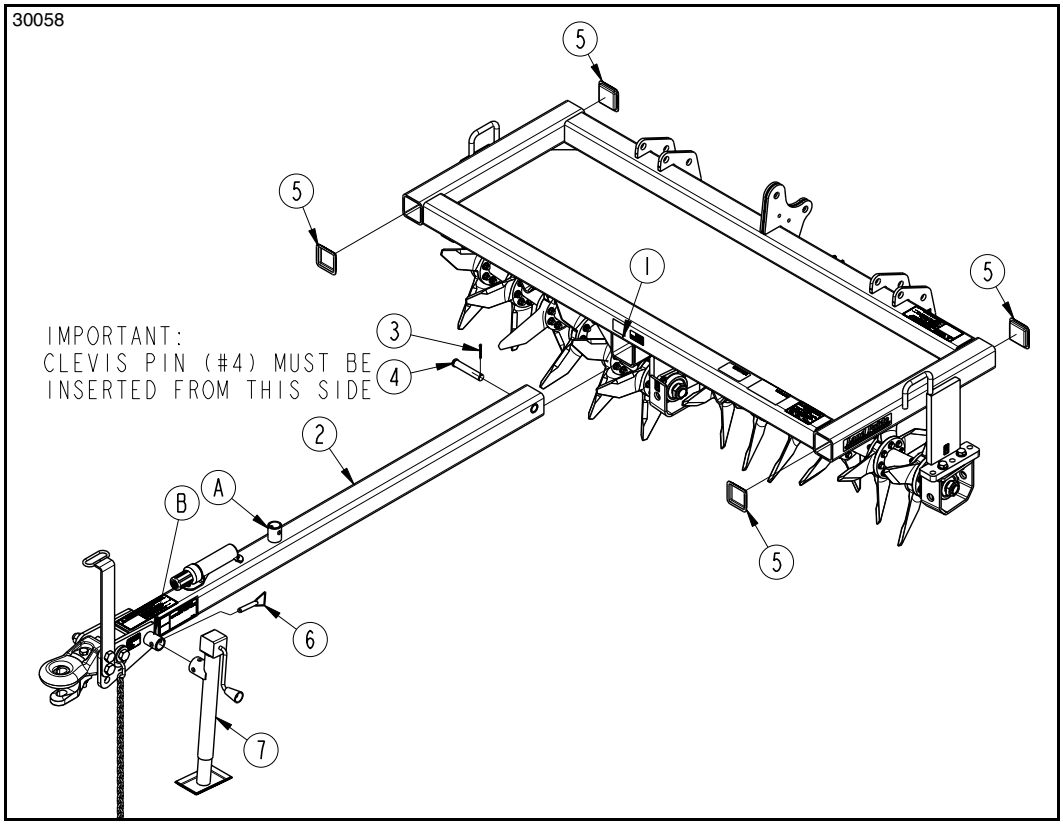

Tongue Assembly
Figure 1-1

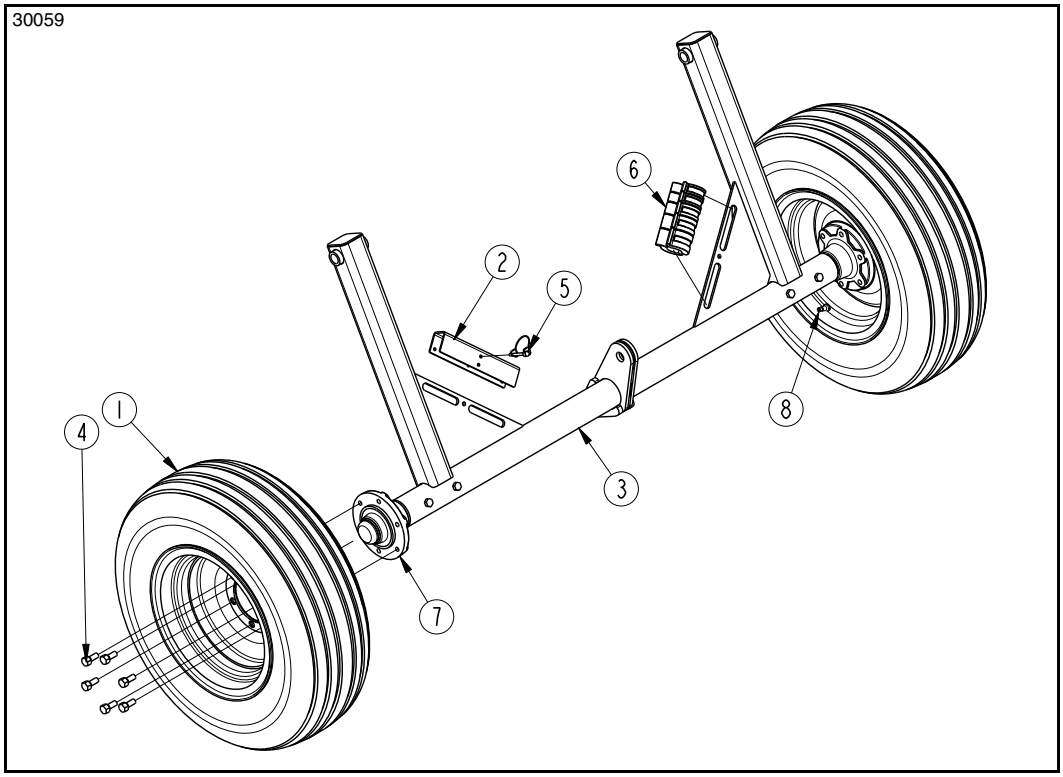

Wheel and Axle Assembly
Figure 1-2

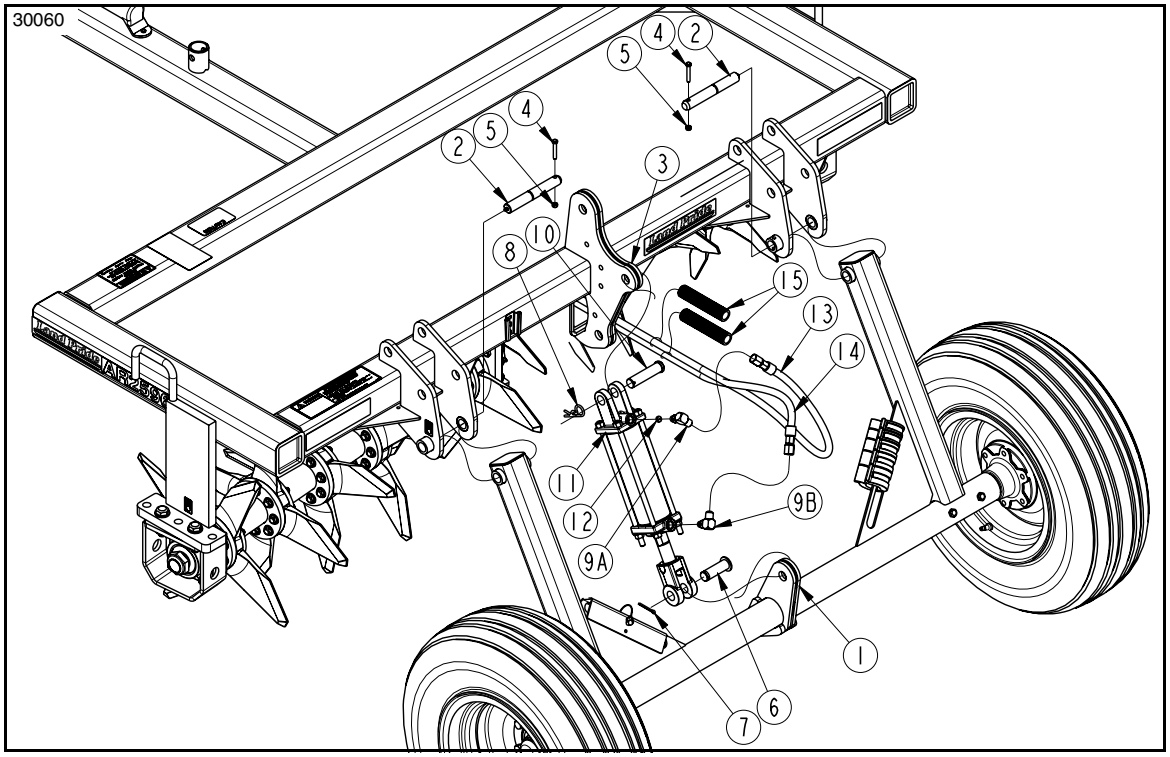

Rear Axle and Lift Cylinder Assembly
Figure 1-3

Rear Axle and Lift Cylinder Assembly

Refer to Figure 1-3 on page 10:

IMPORTANT: Insert zerk end of pivot pins (#2) in first as shown. Protect zerks when hammering on pins by hitting pins on the end without a zerk.

1. Attach rear axle assembly (#1) to the Aerator's main frame with 7 1/4" (18 cm) long pivot pins (#2). Make sure the grease zerks on pins (#2) face out and lug (#1) is up.
2. Secure pivot pins with 5/16"-18 x 2" GR5 hex head cap screws (#4) and locknuts (#5). Tighten nuts to the correct torque.
3. Install orifice plug (#12) into the cylinder port located near the base end of hydraulic cylinder (#11). Screw plug in until orifice bottoms out. Do not tighten.
4. Screw elbow fittings (#9A & #9B) into both cylinder ports with O-rings facing ports. Do not tighten elbows until step #17.
5. Attach base end of hydraulic cylinder (#11) to the Aerator's main frame (#3) with 1" x 3 11/16" clevis pin (#10). Secure pin with hairpin cotter (#8).
6. Attach rod end of hydraulic cylinder (#11) to axle assembly (#1) with 1" x 2 3/4" clevis pin (#6). Secure clevis pin with cotter pin (#7). Bend one or more legs on the cotter pin to keep it from falling out.

Refer to Figure 1-4 on page 11:

7. Attach 3/4" adapter (#18) to hydraulic hoses (#13 & #14) and tighten.
8. Attach quick disconnect couplings (#19) to adapters (#18) and tighten.

Refer to Figure 1-3:

9. Insert the longer, 201" (510 cm) hydraulic hose (#14) into the back opening end of the Aerator tongue. Push hose through tongue and out its front opening.
10. Install flex guard (#15) over hydraulic hose (#14) at the cylinder end and push flex guard halfway into the tongue to protect hydraulic hose from wear.
11. Attach hydraulic hose (#14) to elbow fitting (#9B) and tighten.
12. Insert the shorter, 185" (470 cm) hydraulic hose (#13) into the back opening end of the Aerator tongue. Push hose through tongue and out its front opening.
13. Install flex guard (#15) over hose (#13) at the cylinder end and push flex guard halfway into the tongue to protect hydraulic hose from wear.
14. Attach hydraulic hose (#13) to elbow fitting (#9A) and tighten.

Refer to Figure 1-4 on page 11:

15. Pull hydraulic hoses (#13 & #14) out of opening (#17) until most of the slack in the hoses at the hydraulic cylinder have been removed.
16. Run hydraulic hoses through hose loop (#16).

Refer to Figure 1-3:

17. Orient elbows (#9A & #9B) to suit and tighten to hydraulic cylinder (#11).

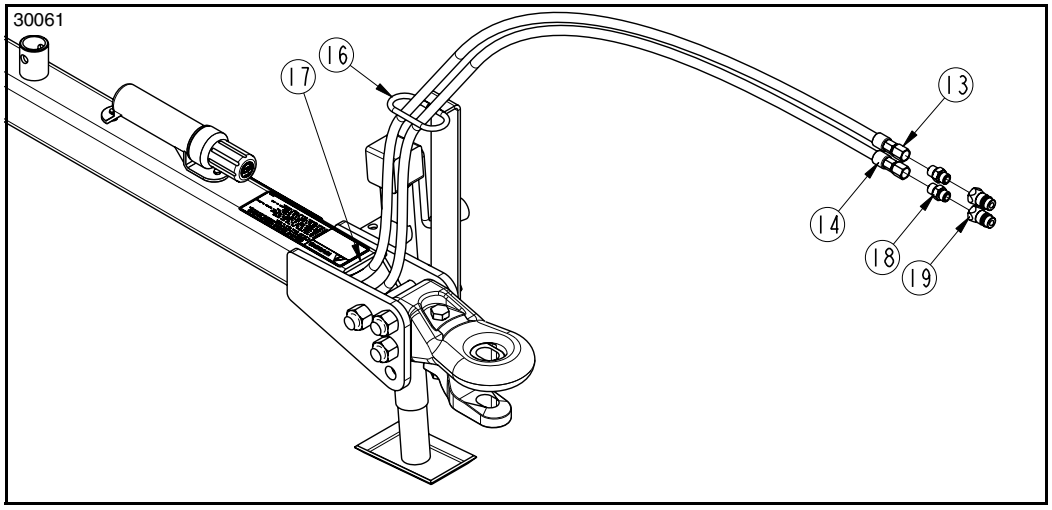

Hydraulic Hose Routing and Quick Coupling Assembly
Figure 1-4

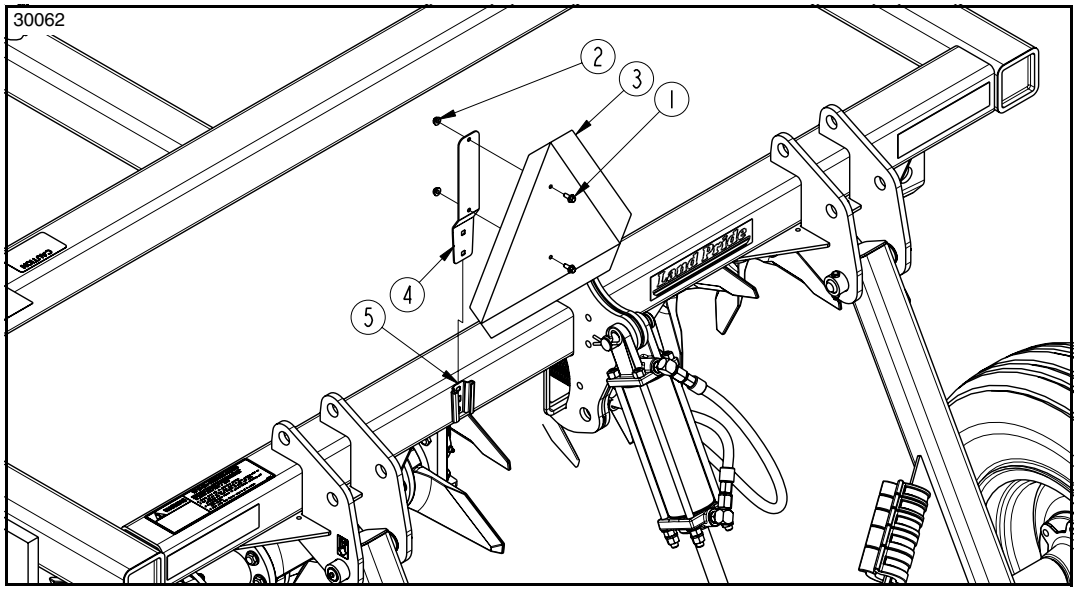

Slow Moving Vehicle Sign Assembly
Figure 1-5

Slow Moving Vehicle Sign (SMV)

Refer to Figure 1-5:

1. Bolt SMV sign (#3) to mounting blade (#4) as shown with 1/4"-20 x 5/8" GR5 hex flange screws (#1) and hex flange nuts (#2). Tighten nuts to the correct torque.
2. Insert mounting blade (#4) into mounting socket (#5).

Rear Hitch Assembly (Accessory)

Refer to Figure 2-1:

1. Attach leveling hitch (#2) to axle frame (#1) with 1" x 2 3/4" clevis pin (#4). Secure clevis pin with 3/16" x 1 3/4" cotter pin (#5). Bend one or both legs of cotter pin to keep pin from falling out.
2. Attach ratchet jack (#8) to the Aerator frame (#3) and leveling hitch (#2) with 1" x 3 3/16" clevis pins (#7) and 3/16" hairpin cotters (#6).
3. Operate ratchet jack lever (#9) until hitch is level.

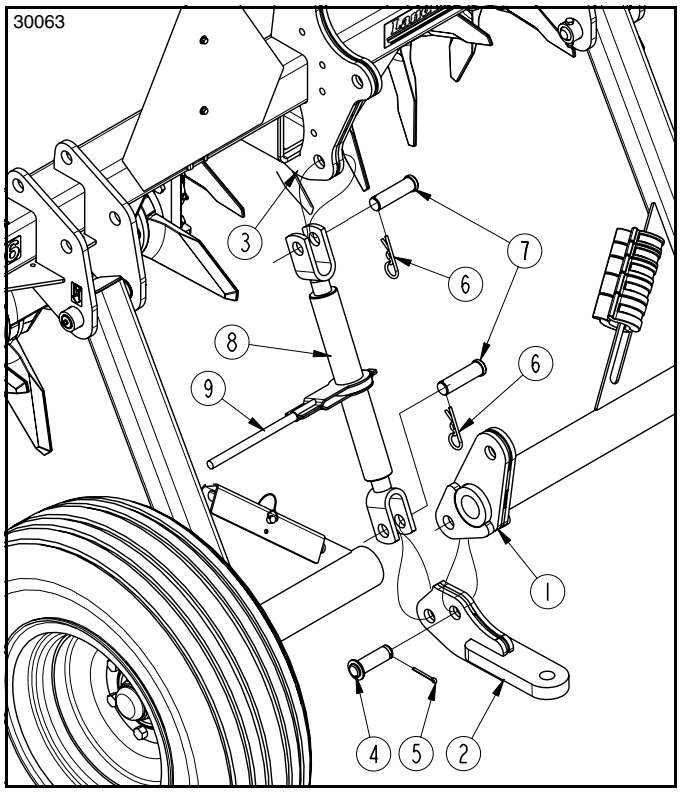

Rear Hitch Assembly
Figure 2-1

Concrete Weights (Optional)

Refer to Figure 2-2:

DANGER

To avoid serious injury or death:

Concrete blocks weight 740 lbs (336 kg). each. Stay clear of them while lifting them into place. Hands and fingers can easily become pinched by the blocks or the blocks could shift suddenly or fall causing serious bodily injury or death.

IMPORTANT: Use equipment capable of lifting a minimum of 800 lbs (363 kg). Lift one concrete block at a time using lifting rods “B” to raise and lower the blocks onto the platform frame.

NOTE: Remove SMV sign (#4) from its mounting socket to prevent hitting the sign while installing the concrete blocks. Replace SMV sign after the blocks are installed.

Mounting 2 Concrete Blocks

1. Position concrete blocks (#1 & #3) onto the platform ends. Make sure they are against the square tubes on the ends and resting fully on the platform floor.
2. Place a spacer or spacers between the blocks to keep then from shifting to one side. (Spacer(s) provided by customer)

Mounting 3 Concrete Blocks

1. Position concrete block (#1) onto the platform against the left end. Make sure it is against the square tube on that end and is resting fully on the platform floor.
2. Position the middle concrete block (#2) centered on the platform frame.
   - **AR2596:** The center block should be approximately 3 3/8" (8.6 cm) from the first block and resting fully on the platform.
   - **AR2510:** The center block should be approximately 15 3/8" (39 cm) from the first block and resting fully on the platform.
3. Position concrete block (#3) onto the platform against the right end. Make sure it is against the square tube on that end and is resting fully on the platform floor.
4. Place spacers between the blocks to keep them from shifting to one side. (Spacers provided by customer)

Mounting 4 Concrete Blocks

Instructions For AR2510 Aerator Only

1. Position concrete block (#1) onto the platform against the left end. Make sure it is against the square tube on that end and is resting fully on the platform floor.
2. Position the second concrete block (#2) approximately 4" (10 cm) from the first block and resting fully on the platform.
3. Position the third concrete block (#4 not shown) approximately 4" (10 cm) from the second block and resting fully on the platform
4. Position the fourth concrete block (#3) onto the platform against the right end. Make sure it is against the square tube on that end and is resting fully on the platform floor.
5. Place spacers between the blocks to keep them from shifting to one side. (Spacers provided by customer)

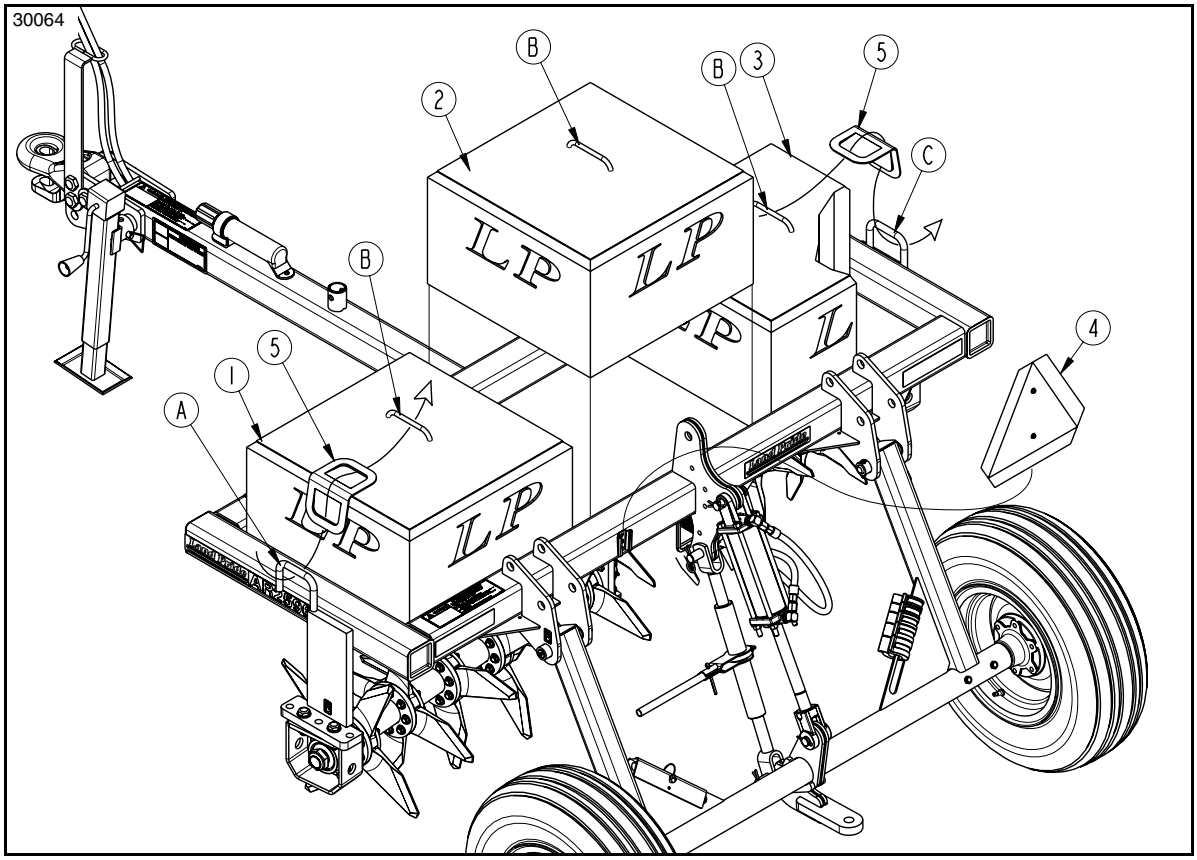

Concrete Weight Assembly (AR2596 Shown)
Figure 2-2

Tie Down Concrete Blocks

Refer to Figure 2-2:

Always use heavy duty tie-downs, straps, and corner protector pads (strap and pads supplied by customer) to secure Land Pride concrete blocks from bouncing on the platform while traveling over rough terrain and on a road that may have bumps and ruts. Corner protector pads (#5) are available through Land Pride's Parts Department. Order 2 each of Part No. 816-646C.

NOTE: Weights can bounce out if bump is severe.

1. Attach strap to handle "A" on the left side.
2. Thread strap through corner protector pad (#5) on the left side, lifting rods "B", corner protector pad (#5) on the right side and to handle "C". Tighten strap to secure blocks in place.

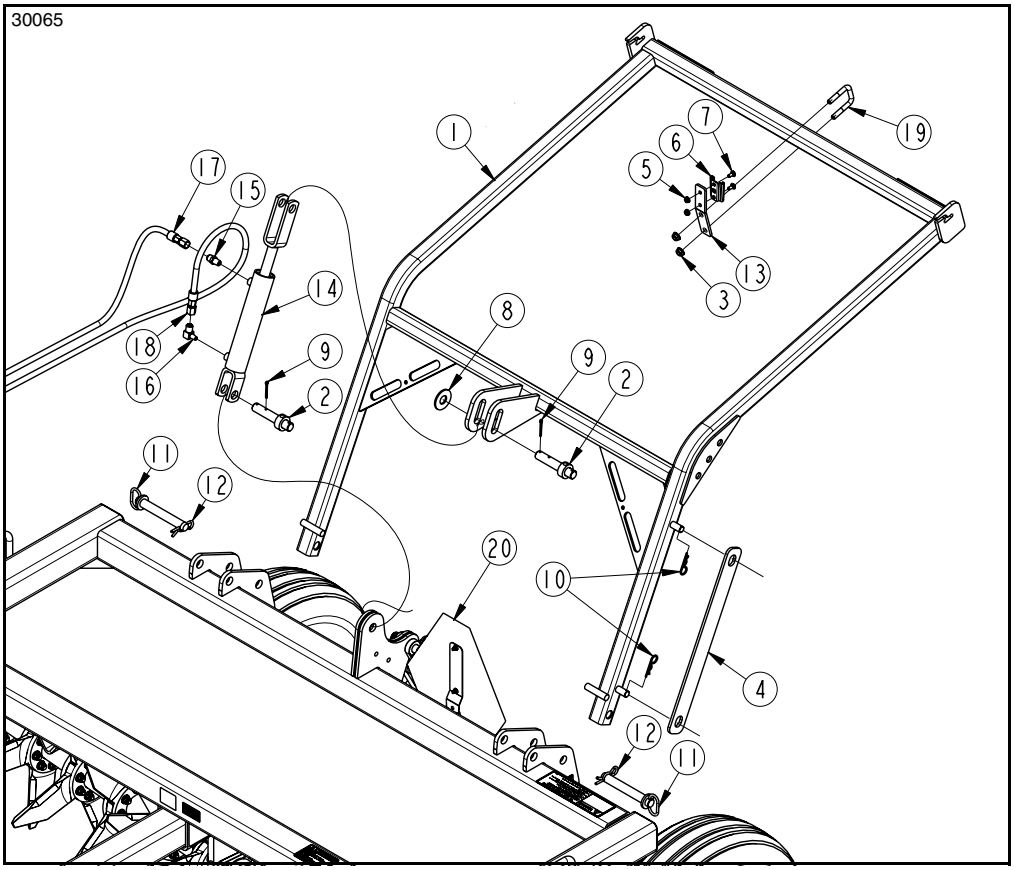

Drag Harrow Carrier Assembly
Figure 2-3

Drag Harrow Carrier (Optional)

Refer to Figure 2-3:

NOTE: Drag Harrow Carrier and Drag Harrow are sold separately.

IMPORTANT: Make sure the Aerator is properly supported so that it won't flip over backwards during installation of the lift frame. One method would be to hitch the tongue to a tractor.

1. Orient lift frame (#1) as shown and pin to Aerator frame with 1" x 6" hitch pins (#11). Secure hitch pin with hairpin cotters (#12).
2. Attach SMV mount bar (#13) to lift frame (#1) aas shown with 1/2"-13 x 2" x 3" GR5 U-bolt (#19) and hex flange locknuts (#3). Torque locknuts tight.
3. Attach SMV mount socket (#6) to mount bar (#13) as shown with 5/16""-18 x 3/4" GR5 carriage bolts (#7) and 5/16" hex whiz nuts (#5). Torque whiz nuts tight.
4. Move SMV sign (#20) from back of aerator to mounting socket (#6).
5. Apply teflon tape to the 3/8" threads of straight adapter (#15) and screw adapter into the cylinder port located closest to the rod end of hydraulic cylinder (#14). Tighten adapter.
6. Apply teflon tape to the 3/8" threads of elbow fitting (#16) and screw elbow into the cylinder port located closest to the base end of hydraulic cylinder (#14). Tighten elbow oriented as shown.
7. Attach 3/8" x 201" long hydraulic hoses (#17) to adapter fitting (#15).
8. Attach 3/8" x 217" long hydraulic hoses (#18) to elbow fitting (#16).

Refer to Figure 2-4 on page 15:

9. Attach 3/4" adapters (#23) to hose ends and tighten.
10. Attach quick disconnect couplings (#24) to the adapters tighten.

Refer to Figure 2-3:

11. Orient hoses so that they are on the right side of the cylinder (#14). Attach base end of hydraulic cylinder to the Aerator frame with cylinder pin (#2).
12. Attach rod end of hydraulic cylinder (#14) to the lift frame with cylinder pin (#2) and flat washer (#8).
13. Insert 3/16" x 1 3/4" cotter pins (#9) into cylinder pins (#2). Bend one or both legs to secure them in place.

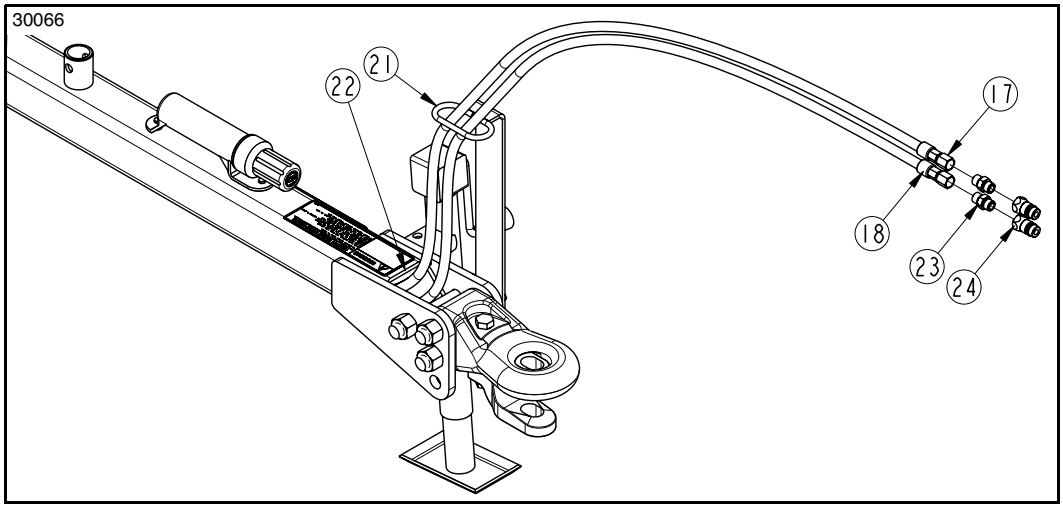

Hydraulic Hose Routing & Quick Coupling Assembly
Figure 2-4

Refer to Figure 2-4:

14. Insert hydraulic hoses (#17 & #18) into the open end of the tongue located at the back of the main frame. Push both hoses together through the tongue and out the front (#22) as shown in Figure 2-4.
15. Pivot lift frame up and down to find the maximum distance between hydraulic cylinder and opening end of tongue. Pull hydraulic hoses (#17 & #18) out of end (#22) until most of the slack in the hoses have been removed.
16. Run hydraulic hoses through hose loop (#21).
17. Pivot lift frame fully up and down to make sure the hydraulic hoses are not hanging up.

Refer to Figure 2-3 on page 14:

18. Attach transport bar (#4) to the left side of the lift frame and secure in place with hairpin cotters (#10).

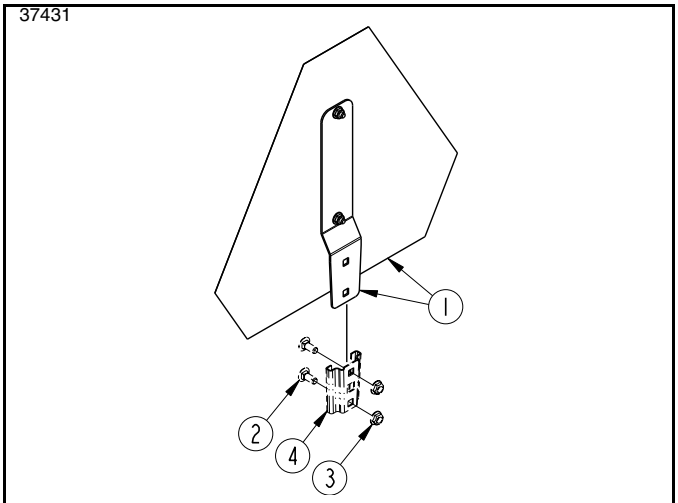

Item	Part No.	Description
1	316-362S	SLOW MOVING VEHICLE SIGN
2	802-092C	RHSNB 5/16-18X3/4 GR5
3	803-177C	NUT HEX FLG TP LK 5/16-18ZNYCR
4	890-401C	MOUNTING SOCKET

Slow Moving Vehicle Sign
Figure 2-5

Slow Moving Vehicle Sign Accessory

Refer to Figure 2-5:

If your tractor or Aerator does not have a movable sign that fits Land Pride's mounting socket (#4), you can purchase a slow moving vehicle sign (#1) to fit the socket. If you have need for mounting this sign on other equipment, you can purchase items (#2, #3, & #4) for mounting the sign.

Drag Harrow (Stand Alone Unit)

Refer to Figure 2-5:

Order Drag Harrow (#1) Model No. DRG08 (8 ft. harrow) from your nearest Land Pride dealer. Be sure to read the Operator's Manual 322-207M supplied with the harrow before continuing.

Drag Harrow Assembly

See **"Drag Harrow Assembly"** in the Drag Harrow Operator's Manual for instructions on how to properly assemble the unit.

Hook-up To Rear Level Hitch

See **"Hook-up to Tractor Drawbar"** in the Drag Harrow Operator's Manual for instructions on how to properly attach pull ring (#2) to the Aerator's rear level hitch.

Hook-up To Drag Harrow Carrier

DANGER

To avoid serious injury or death:

- *Make sure the Aerator's main frame is properly supported or securely hitched to a tractor before working on or around the unit to keep unit from flipping over backwards causing serious injury or death.*
- *Do not add extra weight to the lift frame or hang from the lift frame. The Aerator could flip over backwards causing injury or death.*
- *Do not climb on the unit or lift frame. Doing so can result in serious injury or death.*

CAUTION

To avoid minor or moderate injury:

Refer to Figure 2-6:

Be Careful not to pinch yourself in the jointed sections of the harrow while hooking the lower hooks (#4) to the transport holes (#7).

Refer to Figure 2-5 & Figure 2-6:

1. Lower lift frame (#8) until slotted hooks (#5) are close to the ground.
2. Shut tractor down properly before dismounting. Refer to **"Tractor Shutdown Procedure"** on page 22.
3. Properly orient harrow pull ring (#2) to the Aerator.
4. Place pull ring (#2) behind SMV sign (#6) so that it is centered between the two slotted pull hooks (#5).
5. With pull ring centered between the slotted pull hooks, hook pull chain (#3) to the slotted hooks (#5).
6. When transporting, attach rear hooks (#4) (second hooks in from the outside) to one of the three transport holes (#7) in the lift frame.

IMPORTANT: Hydraulic hose damage can occur if hooks (#4) are not attached to transport holes (#7) before transporting with the unit.

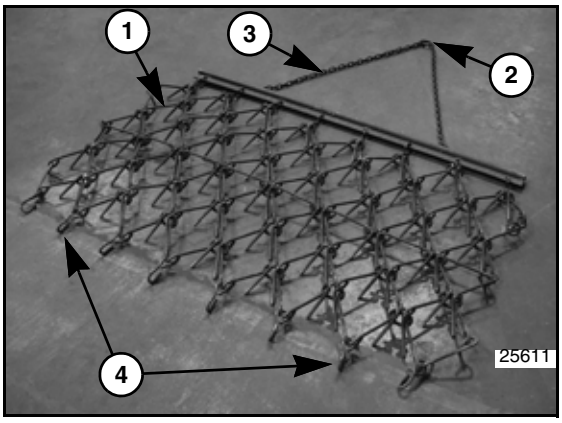

Drag Harrow
Figure 2-5

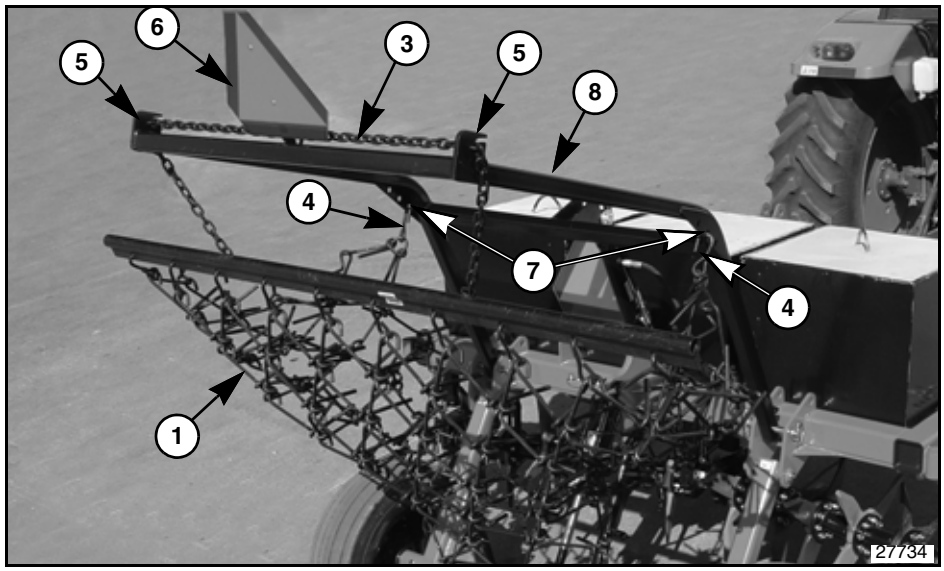

Drag Harrow Hook-up to Drag Harrow Carrier
Figure 2-6

Hitch Height

Refer to Figure 3-1:

Cat. IV hitch (#5) can be raised or lowered to suit. Hitch in Figure 3-1 is shown being installed in the highest position. Use this location for tractors with a high drawbar. Use the lower mounting location for tractors with a lower drawbar.

1. With tongue supported by the support jack (#4), remove cap screws (#2).
2. Align Cat. IV hitch with the top two holes or with the bottom two holes as needed.
3. Insert 1"-8 x 7" GR5 cap screws (#2) through mounting holes in hose holder (#1), nearside holes in the tongue, mounting holes in Cat. IV hitch (#5), and out through the far side holes in the tongue.
4. Secure cap screws with nylon insert nuts (#3). Tighten nuts to the correct torque.

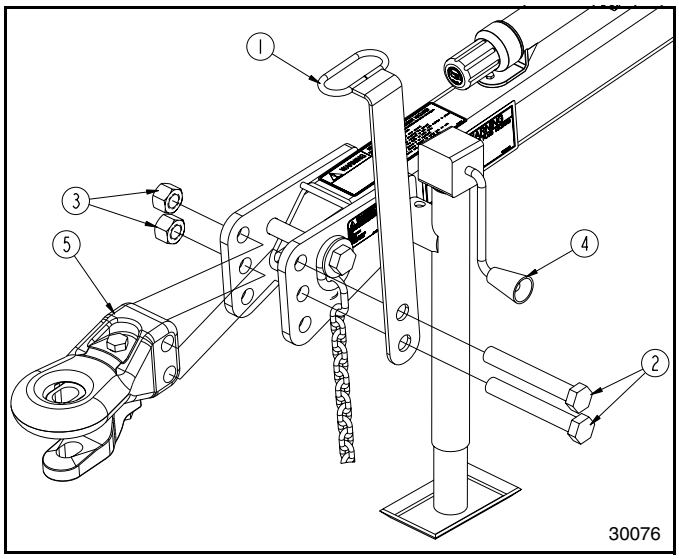

Hitch Height Adjustment
Figure 3-1

Rotor Tine Gang Angle

WARNING

To avoid serious injury or death:

Keep everyone clear of the rotor tines while adjusting tine gang angle. Removing bolts to adjust tine gang angle will allow the gang to drop if not properly supported. Body extremities can be injured should the gang drop.

IMPORTANT: For safety, it is best to make adjustments to the gang angle with the Aerator raised just enough to support the tines off the ground by not more than 1" (2.5 cm).

The tine gang angle can be adjusted to 2 1/2°,5° & 71/2°. The greater the angle the greater the cultivation action on the soil.

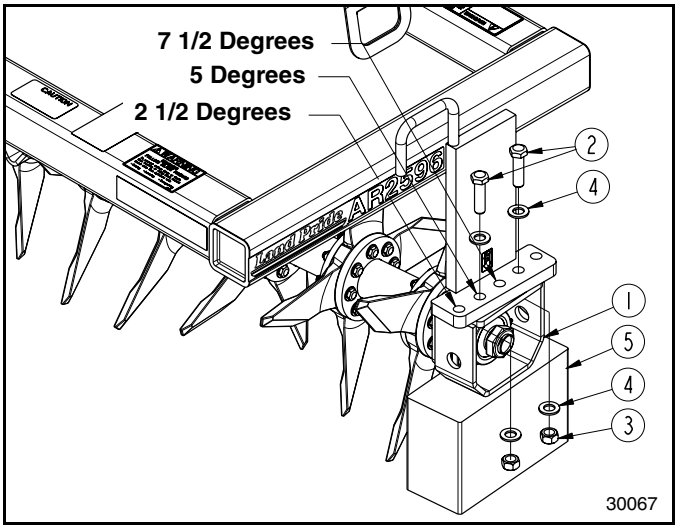

Tine Angle Adjustment (5 Degrees Shown)
Figure 3-2

Refer to Figure 3-2:

1. Park on a flat level surface, engage park brake, raise Aerator until tines are approximately 1" (2.5 cm) off the ground.
2. Without changing the height of the implement, shut tractor down using **"Tractor Shutdown Procedure"** on page 22.
3. Place support block (#5) under bearing guard (#1) to keep the rotor tine gang from falling. **Do not force support block tight** against the bearing guard as this will making adjusting the gang angle difficult.
4. Loosen both hex top locknuts (#3) until bearing guard (#1) is resting on support block (#5).
5. Remove hex top locknuts (#3), cap screws (#2), and flat washers (#4).
6. Slide gang on the support block to one of the three positions where the front gang hole in bearing guard aligns with one of the selected three front mounting holes (2 1/2°, 5°, or 7 1/2°) in the bearing support.
7. Reinstall 3/4"-10 x 2 3/4" GR5 cap screws (#2), flat washers (#4), and hex top locknuts (#3). Tighten nuts to the correct torque.
8. Repeat steps 3 to 7 for the other rotor tine gang.

Operator's Responsibilities

Hazard control and accident prevention are dependent upon the awareness, concern, prudence, and proper training involved in the operation, transport, storage, and maintenance of the Aerator. Therefore, it is absolutely essential that no one operates the Aerator unless they have read, fully understood, and are totally familiar with the Operator's Manual. Perform the following inspections before using your Pasture Aerator.

Operating Checklist

✔	Check	Page
	Read and follow all Safety Rules and alerts carefully. See "Important Safety Information".	1
	Make sure all guards and shields are in place. Refer to "Important Safety Information".	1
	Make sure their are no hydraulic leaks on the unit. See "Avoid High Pressure Fluids Hazard".	3
	Read and follow preparation instructions. Refer to "Section 1: Assembly & Set-up".	8
	Read and make all required adjustments. Refer to "Section 3: Adjustments".	17
	Read and follow all operating procedures. Refer to "Section 4: Operating Procedures".	18
	Read and follow all Maintenance Instructions. See "Section 5: Maintenance & Lubrication".	24
	Read and follow all Lubrication Instructions. Refer to "Lubrication Points".	27
	Check Aerator initially and periodically for loose bolts and pins. Refer to "Torque Values Chart".	32

Operator Safety

DANGER

To avoid serious injury or death:

- *Be on the watch for and keep away from ditches, retaining walls, drop-offs, holes, rocks, stumps, tree roots, and other hidden hazards that can cause the tractor to shift suddenly and/or roll over.*
- *Do not use tires as a step or lean against them. They can move suddenly, even when they appear to be solid against the ground, causing a falling hazard against metal protruding objects and sharp tines.*
- *Keep everyone away from the Aerator while raising, lowering, and transporting the unit. Always keep your feet and legs out from under the Aerator. The Aerator could drop instantly resulting in bodily injury or death.*
- *Always secure equipment with solid, non-concrete supports before working under it. Never go under equipment supported by concrete blocks or hydraulics. Concrete can break, hydraulic lines can burst, and/or hydraulic controls can be actuated even when power to the hydraulics is off.*

WARNING

To avoid serious injury or death:

- *Hydraulic fluid under high pressure will penetrate the skin or eyes causing serious injury. Wear protective gloves and safety glasses or goggles when working with hydraulic systems. Use a piece of cardboard or wood, rather than hands, when searching for leaks. If an accident occurs, seek immediate emergency medical care or gangrene may result. DO NOT DELAY.*
- *Never carry riders on the implement or tractor. Riders can obstruct the operator's view, interfere with controls, be pinched by moving components, become entangled in rotating components, struck by objects, thrown about, fall off and be run over, etc.*
- *Allow only persons to operate this implement who have fully read and comprehended this manual, and who are properly trained in the safe operation of this implement.*
- *Operate only power machines equipped with a certified Roll-Over Protective Structure (ROPS) and seat belt. Keep folding ROPS in the "locked up" position when appropriate. If ROPS is in the locked up position, fasten seat belt snugly and securely to help protect against serious injury or death from falling and machine overturn.*
- *Select a safe ground speed that will allow adequate control of steering and stopping. Never exceed 20 mph (32 km/h) with attached equipment. Rough terrain requires a slower speed.*
- *When transporting on public roads, make sure operators in vehicles approaching from the back can easily see the Slow Moving Vehicle (SMV) sign on the implement to warn of your presence.*
- *Do not operate and/or travel across inclines where the tractor and/or implement can rollover. Consult your tractor's manual for acceptable inclines the tractor is capable of traveling across.*
- *Do not turn tractor tires into the tongue or frame. Doing this can result in loss of control and/or damage the implement. Slow down and watch tractor tires carefully when forced to make sharp turns.*
- *Always make sure the tractor is shut off and no one is near the tractor when installing stroke control spacers and/or transport lock. Also, keep away from possible pinch points during installation as the hydraulic lines could burst dropping the unit suddenly.*
- *Never make contact with underground utilities such as electrical power lines, gas lines, phone lines, etc. They can cause serious injury or death from electrocution, explosion, or fire. Always call 811 (USA) or local utility companies before digging so that they can mark the location of underground services in the area. For contact information, see Dig Safe in the "Important Safety Information" starting on page 1.*
- *Make sure safety labels are in their proper location and are in good condition before operating the attached implement. Read and obey all instructions on the labels.*

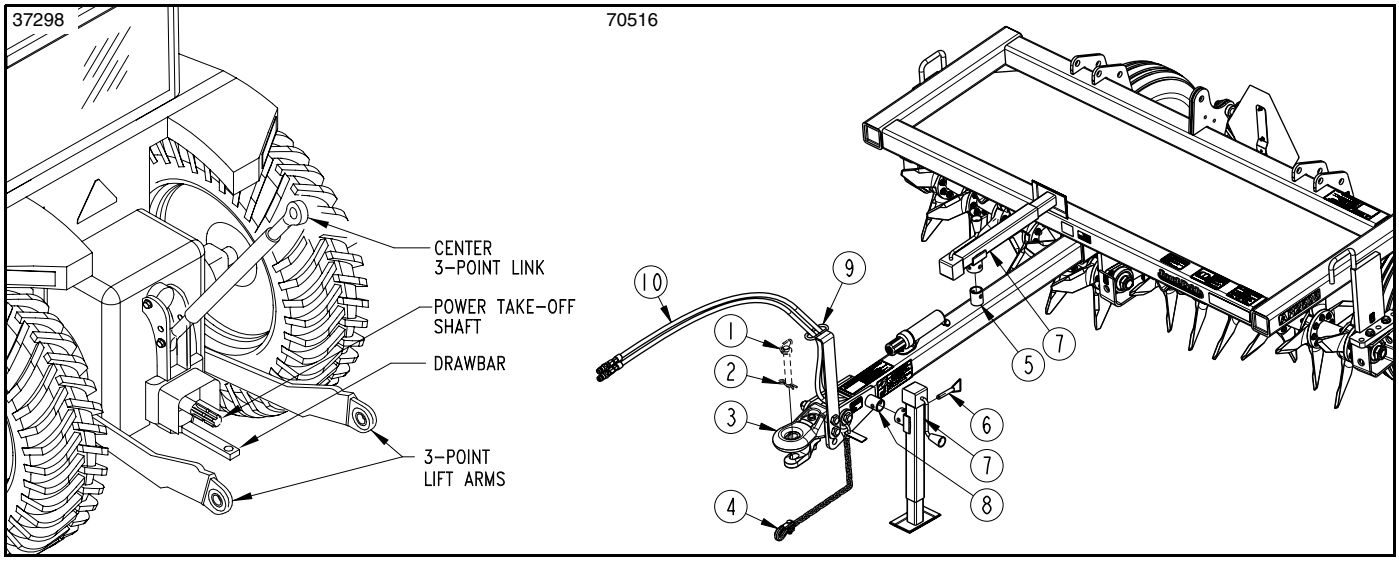

Tractor Hook-up
Figure 4-1

- *Avoid exposure to dust containing crystalline silica particles. This dust can cause serious injury to the lungs (silicosis). Because crystalline silica is a basic component of sand and granite, many activities at construction sites produce dust containing crystalline silica. Trenching, sawing, and boring of material containing crystalline silica can produce dust containing crystalline silica.*

Hook-Up Aerator To Transport

DANGER

To avoid serious injury or death:

A crushing hazard exists while Connecting and disconnecting the implement. Keep people and animals away while backing-up to the implement or pulling away from the implement. Do not operate hydraulic controls while a person or animal is directly behind the power machine or near the implement.

WARNING

To avoid serious injury or death:

- *Always make sure the hitch pin is secured with a keeper clip. Not doing so can result in the unit coming unhitched and out of control.*
- *Always follow "Tractor Shutdown Procedure" provided in this manual before dismounting the tractor.*
- *Shut power machine down and release all hydraulic pressure to the equipment before connecting or disconnecting hydraulic hoses to or from the power machine.*
- *Hydraulic fluid under high pressure will penetrate the skin or eyes causing serious injury. Wear protective gloves and safety glasses or goggles when working with hydraulic systems. Use a piece of cardboard or wood, rather than hands, when searching for leaks. If an accident occurs, seek immediate emergency medical care or gangrene may result. DO NOT DELAY.*

1. Make sure park jack (#7) is securely attached to stob (#8) and ball detent pin (#6) is fully inserted. Adjust park jack to the correct height for hitch (#3) to receive tractor drawbar.
2. Back tractor until drawbar hitch hole(s) align with hole(s) in the Cat. IV Aerator hitch (#3).
3. Shut tractor down before dismounting. Refer to **"Tractor Shutdown Procedure"** on page 22.
4. Attach Aerator hitch to the tractor drawbar with hitch pin (#1). Secure hitch pin with hitch pin keeper (#2). Hitch pin and hitch pin keeper are customer supplied.
5. Attach hitch safety chain (#4) to the tractor. Adjust chain length to remove all slack except what is necessary to permit turning. Lock chain hook securely to the safety chain.
6. Lower park jack (#7) until hitch weight is supported by the tractor drawbar.
7. Remove park jack (#7) from hitch stob (#8) and store on stob (#5) with detent pin (#6). Make sure detent pin is fully inserted.
8. Thread hydraulic hoses (#10) through hose loop (#9) and attach to the tractor duplex outlets.
9. If included, repeat step 8 for the Drag Harrow Carrier hydraulic hoses.

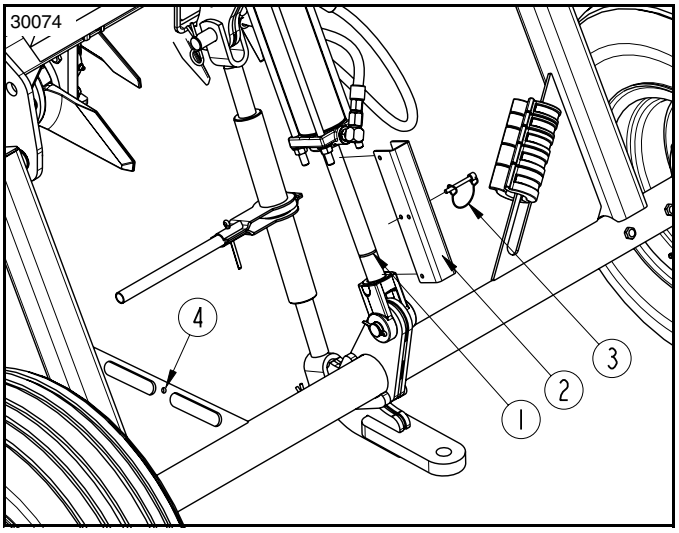

Pull Type Transport Lock
Figure 4-2

Refer to Figure 4-2:

10. Raise Aerator frame fully up with tractor hydraulic control lever.
11. Without lowering Aerator, shut tractor down using **"Tractor Shutdown Procedure"** on page 22.
12. If installed, remove transport lock (#2) from cylinder rod (#1) and store on plate (#4) with wire retaining pin (#3).
13. Air in hydraulic lines can create erratic lifting behavior. Retract and extend lift cylinder several times to remove trapped air from the hydraulic lines. If needed, bleed hydraulic lines at the cylinder fittings to remove any remaining trapped air.

NOTE: The Aerator cylinder has an orifice installed to slow down cylinder movement. See item 12 in Figure 1-3 on page 10 for location of orifice.

14. Raise Aerator fully up and shut tractor down without lowering the Aerator.
15. Remove transport lock (#2) from the rear storage plate (#4) and attach it to cylinder rod (#1) with wire retaining pin (#3).

Refer to Figure 4-3:

16. If included, raise Drag Harrow Carrier fully up and down several times to eliminate air in its hydraulic lines. If necessary, bleed hydraulic lines at the cylinder fittings to remove any remaining trapped air.
17. Raise Drag Harrow Carrier fully up and shut tractor down without lowering the Drag Harrow Carrier.
18. Remove transport lock (#3) from storage pins (#1) and attach it to cylinder rod pins (#2) with hairpin cotters (#4).

Refer to Figure 2-6 on page 16:

19. Attach Drag Harrow to transport frame. See **"Hook-up To Drag Harrow Carrier"** on page 16.

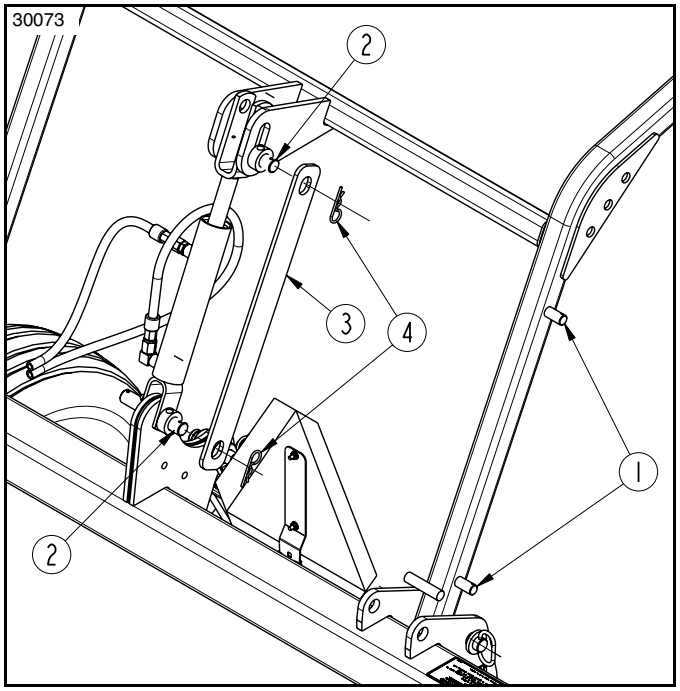

Drag Harrow Transport Bar Placement
Figure 4-3

Transport Aerator

Refer to Figure 4-2:

CAUTION

To avoid minor or moderate injury:

When traveling on public roads whether at night or during the day, use accessory light and devices for adequate warning to operators of other vehicles. Comply with all federal, state, and local laws.

1. Always set transport locks before transporting. Refer to steps 14-15 for the Aerator and steps 17-18 for the Drag Harrow Carrier.
2. When traveling on roadways, transport in such a way that faster moving vehicles may pass you safely.
3. Do not lower unit while transporting on pavement, blacktop, or road. Damage to unit and/or road may occur.
4. Select a safe ground travel speed when transporting from one area to another. Never exceed the tire manufacturer's maximum rated speed of 20 mph (32 km/h).
5. Be sure to reduce tractor ground speed when turning; and, leave enough clearance so that the Aerator does not contact obstacles such as buildings, trees, or fences.
6. When traveling over rough or hilly terrain, shift tractor to a lower gear.

Set-Up For Field Work

Refer to Figure 4-2 on page 20:

1. Raise Aerator fully up with tractor hydraulic control lever.
2. Without changing height of raised Aerator, shut tractor down using **"Tractor Shutdown Procedure"** on page 22.
3. Remove wire retaining pin (#3) and transport lock (#2) from cylinder rod (#1).
4. Place transport lock (#2) on the rear axle storage plate (#4) and secure with wire retaining pin (#3).
5. Return to the tractor and lower Aerator tines down to their preferred working depth. Do not lower Drag Harrow Carrier while making depth and angle adjustments to the Aerator.
6. Travel forward while making adjustments to the tine depth until the preferred depth is determined.
7. Once tine working depth is determined, shutdown tractor following **"Tractor Shutdown Procedure"** on page 22 except do not change lift cylinder (#1) stroke length.

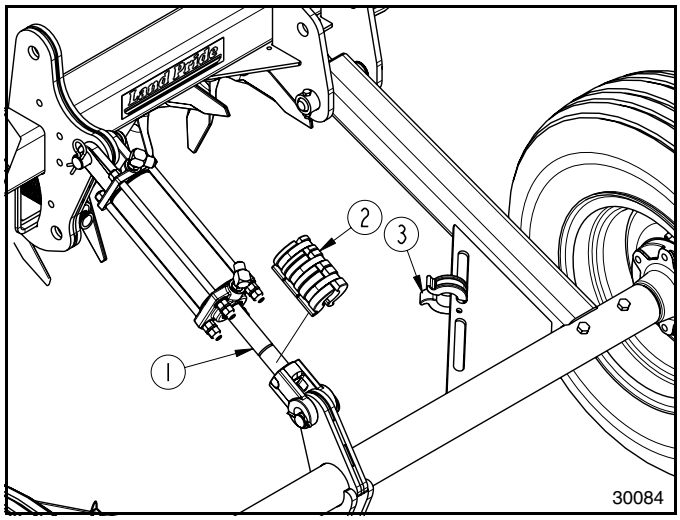

Cylinder Stops
Figure 4-4

Refer to Figure 4-4:

8. Determine which cylinder stops (#2) it will take to fill cylinder rod (#1) at the predetermined depth.
9. Return to the tractor and raise Aerator up.
10. Without lower the Aerator, shut tractor down before dismounting to add the predetermined number of cylinder stops (#2) to cylinder rod (#1).
11. Store remaining stops (#3) on the storage plate shown in Figure 4-4.
12. Restart tractor and lower Aerator until it is resting against the cylinder stops.
13. Adjust rotor tine angle per instructions under **"Rotor Tine Gang Angle"** on page 17.

Refer to Figure 2-6 on page 16:

14. If included, raise Drag Harrow Carrier fully up with tractor hydraulic control lever.
15. Without lowering the Drag Harrow Carrier, shut tractor down before dismounting. Refer to **"Tractor Shutdown Procedure"** on page 22.
16. Unhook Drag Harrow hooks (#4) from Drag Harrow Carrier frame.

Refer to Figure 4-3 on page 20:

17. Remove Drag Harrow transport lock (#3) from cylinder rod pins (#2). Attach transport lock to storage pins (#1) with hairpin cotters (#4).
18. With Drag Harrow hanging straight down, pull forward in the field while lowering the Drag Harrow Carrier frame.

Equipment Operating Safety

- Use Aerator for its intended purpose only. Never use it as a wagon to carry things. Never pull post, stumps, or other objects. Misuse of the Aerator can break the unit.
- Make sure tractor 3-point arms are positioned so that they will not make contact with the tongue.
- Mark underground water piping, sprinkler heads, sizable rocks, and other objects that can be damage or cause damage to the Aerator with small warning flags so they can be avoided.
- Do not exceed weight tray weight limit. Exceeding the limit can damage the tines, tires, and Aerator frame.
- Make gradual turns with tines in the ground. Too sharp a turn can break the tines. Raise Aerator out of the ground to make sharp turns.
- Do not turn tractor tires into the tongue, tines, or frame. Slow down and watch tractor tires carefully when forced to make sharp turns.
- Never back-up with Drag Harrow making contact with the ground. Always raise Drag Harrow up before backing up. Not doing so can break the equipment and punch holes in the tires.
- Use the Aerator for its intended purpose only. Never use the Aerator as a wagon to carry things.
- All nuts, bolts, screws, and fasteners should be checked daily for tightness. Refer to the **"Torque Values Chart for Common Bolt Sizes"** on page 32.
- Do not use to tear up asphalt or for anything other than to fracture/aerate soil.
- Do not alter the Aerator in a way which will adversely affect its performance or reliability or use the Aerator for a purpose for which it was not designed.

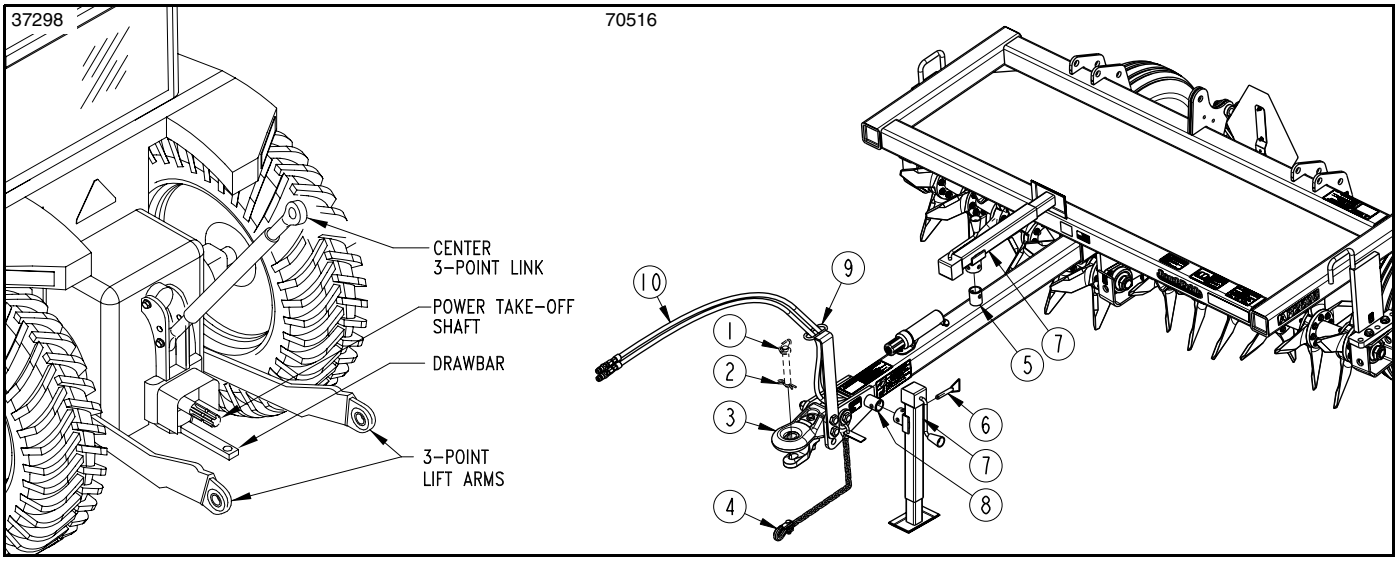

Tractor Hook-up
Figure 4-1

Unhook Aerator

The following steps should be done when unhooking the Aerator from the tractor:

1. Park tractor with Aerator on a solid, level surface. Raise Aerator and if included, Drag Harrow Carrier fully up.
2. **Refer to Figure 2-6 on page 16:** When included, hook Drag Harrow hooks (#4) to Drag Harrow Carrier frame and then lower carrier frame fully down.
3. Without changing Aerator lift height or Drag Harrow Carrier frame height, shut tractor down before dismounting tractor. Refer to **"Tractor Shutdown Procedure"** on page 22.
4. Chock in-front-of and in-back-of Aerator wheels to prevent movement.
5. **Refer to Figure 4-2 on page 20:** Remove Aerator transport lock from rear axle storage plate (#4) and attach transport lock to cylinder rod (#3). Secure transport lock with wire retaining pin (#2).
6. Move tractor hydraulic control lever(s) back and forth to allow the cylinder to come against the transport lock and to release pressure in the hydraulic hoses.
7. Disconnect all hydraulic hoses (#10) from the tractor's duplex outlets. Store hoses coiled around the hose support loop stand (#9) with quick disconnect couplings off the ground.
8. Attach park jack (#7) to stob (#8) with detent pin (#6). Make sure detent pin is fully inserted.
9. Adjust park jack (#7) to lift the hitch weight off the tractor drawbar.
10. Remove hitch pin keeper (#2) and hitch pin (#1). Store hitch pin and keeper in a safe location.
11. Restart tractor and drive tractor slowly forward while making sure hydraulic hoses and implement are clear of the tractor. Drive tractor away from implement.

Tractor Shutdown Procedure

The following are basic tractor shutdown procedures. Follow these procedures and any additional shutdown procedures provided in your tractor Operator's Manual before leaving the operator's seat.

1. Reduce engine speed and shut-off all power to the attachment.
2. Park tractor and attachment on solid, level ground.
3. Lower attachment until it is flat on the ground or on non-concrete support blocks.
4. Put tractor in park or set park brake, turn off engine, and remove ignition key to prevent unauthorized starting.
5. Relieve all hydraulic pressure to auxiliary hydraulic lines.
6. Wait for all components to come to a complete stop before leaving the operator's seat.
7. Use steps, grab-handles and anti-slip surfaces when stepping on and off the tractor.

General Operation Instructions

By now you should have read your Operator's Manual and properly installed your Land Pride 25 Series Aerator on your tractor. If you haven't, please do so now.

Using the Aerator is a fairly simple task but there are a few things you need to consider before beginning. If you are aerating in an area that uses a sprinkler system, you will need to mark the sprinkler heads with small warning flags so they can be avoided. Also, you will want to avoid any sizable rocks or foreign material that might be embedded in the soil that could cause damage to the aerating tines. Most important, do not work over underground electrical wiring or gas lines.

⚠ DANGER

To avoid serious injury or death:

Do not work over any underground electrical wiring or gas lines. If there is any doubt, call your public service agency. Be sure to ask how close you can work to their flags or marks. Making contact with electrical wiring or gas pipes can cause serious injury or death.

Now that you know where you are going to aerate and what precautions need to be taken, it is time to start the tractor and travel to the site where you intend to aerate. It is best to start in the middle of the field and gradually work your way to the outer perimeter with each pass. This will also help keep you from compressing freshly fractured soil.

Begin by lowering the Pasture Aerator until the cylinder has come against the cylinder stops. Pull ahead slowly to get the tines into the ground. If included, lower the Drag Harrow Carrier while moving forward until the Drag Harrow is on the ground. Gradually increase ground speed to approximately 5 mph (8 km/h). Do not make sharp turns with the Aerator in the ground as equipment damage may result.

At the end of each pass lift the Aerator out of the ground to turn around. The Drag Harrow does not need to be raised to make turns. Keep the Aerator out until you have realigned the tractor for the next pass. Look back often to observe your pattern and to make sure you are getting good soil penetration. If you aren't achieving the desired penetration, you may need to add more weight to the Aerator weight tray or wait until after a rain or after irrigation has been applied to soften the ground.

With very little practice you should become very proficient and effective with your Land Pride AR25 Series Aerator.

At the completion of the task the Aerator and Drag Harrow should be cleaned and lubricated. Any trash build-up should be removed. Units being put up for the winter should be stored per the instructions outlined under **"Long-Term Storage"** on page 26.

Introduction

Proper servicing and adjustments are key to the long life of any implement. With careful inspection and routine maintenance, you can avoid costly downtime and repair. Check all bolts after using the unit for several hours to be sure they are tight. Replace any worn, damaged, or illegible safety labels by obtaining new labels from your Land Pride dealer.

DANGER

To avoid serious injury or death:

Always secure equipment with solid, non-concrete supports before working under it. Never go under equipment supported by concrete blocks or hydraulics. Concrete can break, hydraulic lines can burst, and/or hydraulic controls can be actuated even when power to the hydraulics is off.

WARNING

To avoid serious injury or death:

- *Make sure controls are all in the neutral position or park before starting the power machine.*
- *Allow only persons to perform maintenance on this implement who have been properly trained in its safe operation.*
- *Perform scheduled maintenance. Check for loose hardware, missing parts, broken parts, structural cracks, and excessive wear. Make repairs before putting the implement back into service.*
- *Before any lubrication or maintenance is performed, lower implement to ground, shut engine off, and remove ignition key. Do not attempt to lubricate or perform maintenance with implement or power machine running.*
- *Do not alter implement or replace parts on the implement with other brands. Other brands may not fit properly or meet OEM (Original Equipment Manufacturer) specifications. They can weaken the integrity and impair the safety, function, performance, and life of the implement. Replace parts only with genuine OEM parts.*

Hydraulic System

One of the most important things you can do to prevent hydraulic system problems is ensure that your tractor's reservoir remains free of dirt and contamination. Use a clean cloth to wipe hose ends before attaching them to your tractor. Replace your tractor's hydraulic filter element at the prescribed intervals. These simple maintenances will go a long way to prevent occurrence of control valve and hydraulic cylinder problems.

Tine Replacement

Refer to Figure 5-1 on page 25:

DANGER

To avoid serious injury or death:

Always secure equipment with solid, non-concrete supports before working under it. Never go under equipment supported by concrete blocks or hydraulics. Concrete can break, hydraulic lines can burst, and/or hydraulic controls can be actuated even when power to the hydraulics is off.

"Right-Hand" or "Left-Hand" as used in this manual is determined by facing the direction the machine will operate while in use.

Stamped on the tines (see Arrows in Figure 5-1) is Land Pride's name, tine part number, and LH for left-hand or RH for right-hand tine designation.

IMPORTANT: Make sure right-hand tines are mounted on the right-hand gang and left-hand tines are mounted on the left-hand gang and that the knife edge leads as the tine rotates about the shaft.

IMPORTANT: Tines are bolted on in a Spiral pattern 22.5 degrees from one blade to the blade on the next flange over. Arrow in Figure 5-2 on page 25 shows tines shifting 22.5 degrees from one hub assembly to the next.

Refer to Figure 5-3 on page 25:

1. Loosen 8 nuts (#2) on one hub two or three turns.
2. Remove two bolts (#1) securing tine (#4) if working on the Left-Hand Gang or tine (#5) if working on the Right-Hand Gang.
3. Examine removed hardware for wear. Replace worn hardware with new hardware if required.
4. Examine stamped information on the removed tine. Replace worn tine with a new tine that has the same stamped information.

IMPORTANT: Bolt installation direction is critical. Always insert bolts into the thicker 5/8" plate first.

5. Install new tine (#5 or #6) by sliding one hardened flat washer (#3) over each 1/2"-20 x 3" GRL9 cap screw (#1) and then inserting the two cap screws into the thicker 5/8" plate first. After the bolt has been fully inserted, slide a second hardened flat washer onto the two cap screws as shown.

IMPORTANT: Loctite 246 should be applied to the cap screw threads before installing locknuts.

6. Apply Loctite 246 on the end 1/4" (6 mm) length of threads. Screw hex flange locknuts (#2) onto the cap screws on 3 or 4 turns only. Do not tighten.
7. Repeat steps 2 to 5 until all four tines on a single hub have been replaced.
8. Tighten all 8 hex flange locknuts (#2) on that hub to the correct torque. **See "Additional Torque Values"** on page 32 **for correct torque value.**
9. Move on to the next hub and repeat steps 1 to 8.
10. Continue reworking one hub at a time until all worn tines have been replaced with new tines.

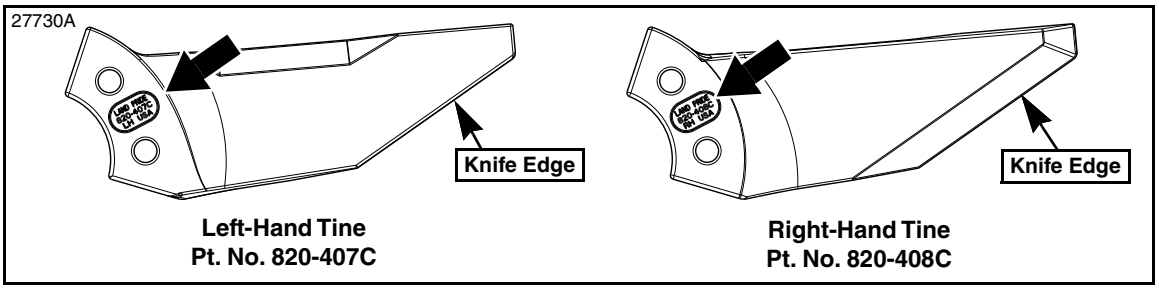

Right-Hand & Left-Hand Tines
Figure 5-1

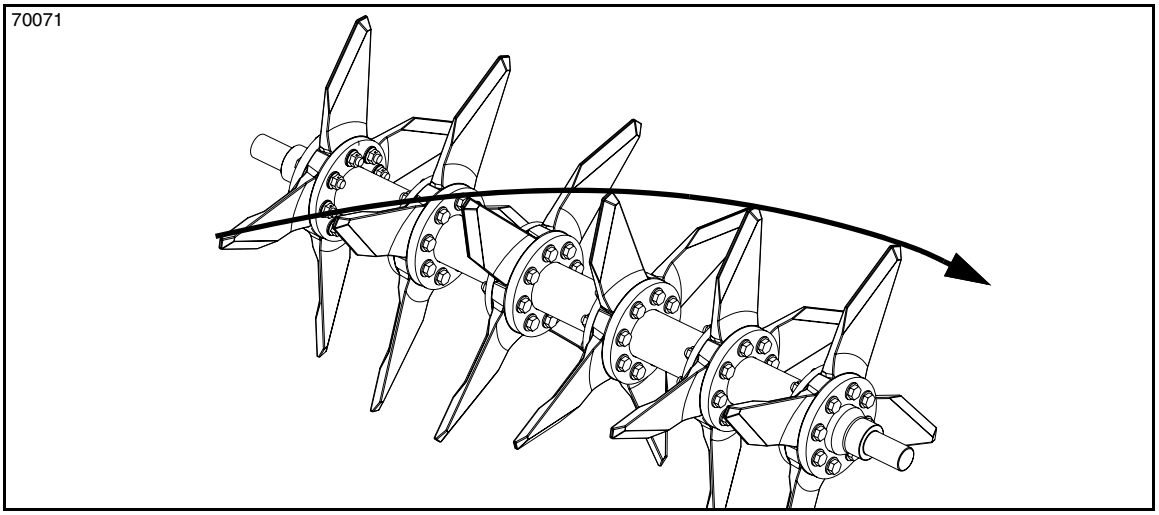

Spiral Pattern of Tines (Left-Hand Gang Shown)
Figure 5-2

Notes:
1. Insert cap screws (#1) into the thicker 5/8" plate first and 1/2" plate last.
2. Apply Loctite 246 to cap screws (#1) before installing tine locknuts (#2).
3. Tighten tine locknuts (#2) to the "Additional Torque Values" provided on page 32.

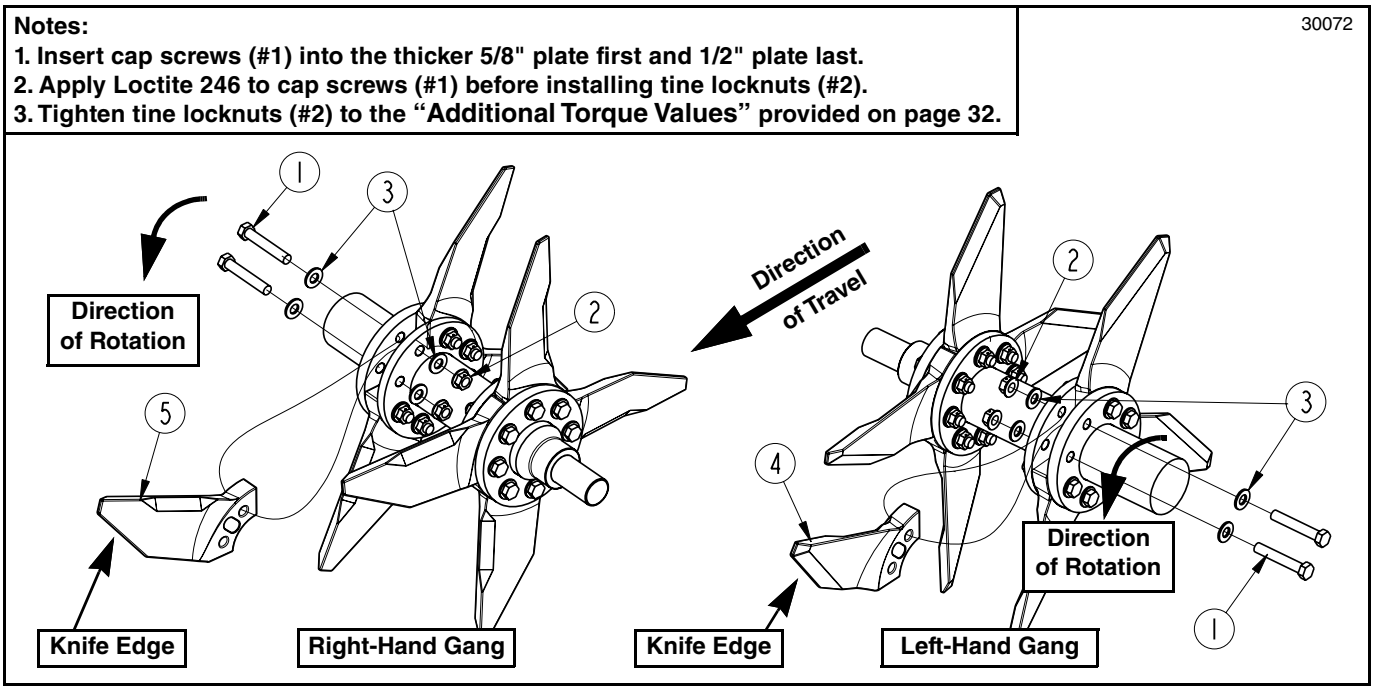

Tine Assembly (Front View)
Figure 5-3

Long-Term Storage

Clean, inspect, service, and make necessary repairs to the Aerator when storing it for long periods and when storing it at the end of a working season. This will help ensure that the Aerator is ready for field use the next time you hook-up to it.

DANGER

To avoid serious injury or death:

Always secure equipment with solid, non-concrete supports before working under it. Never go under equipment supported by concrete blocks or hydraulics. Concrete can break, hydraulic lines can burst, and/or hydraulic controls can be actuated even when power to the hydraulics is off.

IMPORTANT: The following should be adhered to when parking the Aerator:

- When parking with Aerator attached to the tractor, lower Aerator down so that its weight is resting on the tines.
- When unhooking from the Aerator, lower Aerator against hydraulic cylinder transport lock and support hitch with the jack stand.

1. Clean off any dirt and grease that may have accumulated on the Aerator and moving parts. Scrape off compacted dirt and then wash surface thoroughly with a garden hose. A coating of oil may also be applied to the unpainted area to minimize oxidation.
2. Check tines and tine bolts for wear. Replace as needed.
3. Inspect for loose, damaged, or worn parts and adjust or replace as needed.
4. Lubricate as noted in **"Lubrication Points"** starting on page 27.
5. Apply a light coat of oil or grease to the tines and exposed cylinder rods to minimize oxidation.
6. Replace all damaged or missing decals.
7. Store Aerator on a level surface in a clean, dry place. Inside storage will reduce maintenance and make for a longer Aerator life.
8. Follow all unhooking instructions on page 22 when disconnecting tractor from Aerator.
9. Repaint parts where paint is worn or scratched to prevent rust. Ask your dealer for Aerosol Land Pride touch-up paint. Paint is also available in touch-up bottles with brush, quarts, and gallon sizes by adding TU, QT, or GL to the end of the Aerosol part number.

Land Pride Touch-up Paint

Part No.	Part Description
821-011C	PAINT LP BEIGE SPRAY CAN
821-066C	PAINT ORANGE SPRAY CAN
821-070C	PAINT GP GLOSS BLACK SPRAY CAN

Ordering Replacement Parts

Land Pride offers equipment in factory standard Beige with black highlights. This implement is also available in Orange.

When ordering an optional color, the suffix number corresponding to the color must be added at the end of the part number. Parts ordered without the suffix number will be supplied in factory standard colors.

82 . . . . . Orange **85. . . . . Black**

For example, if you are ordering a replacement part with part number 555-555C and the existing part is orange, then add the suffix 82 to the end of the number to make the part number read 555-555C82.

Lubrication Points

Lubrication Legend

Multi-purpose spray lube

Multi-purpose grease lube

Multi-purpose oil lube

50 Hrs — Intervals in hours at which lubrication is required

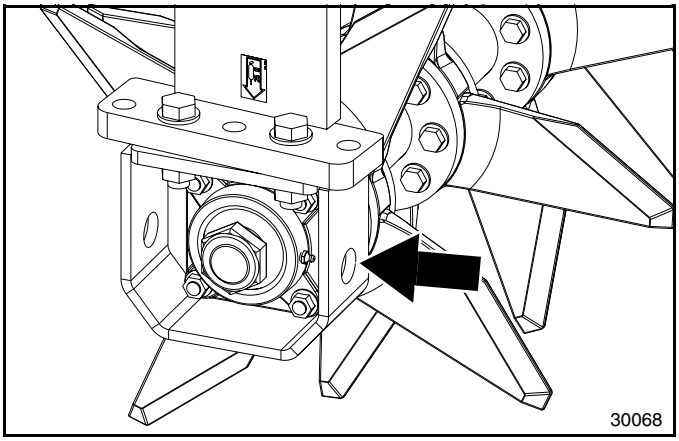

25 Hours

Tine Gang Hanger Bearings

4 - Zerks (1 for every hanger bearing

Type of Lubrication: Multi-purpose Grease

Quantity = as needed

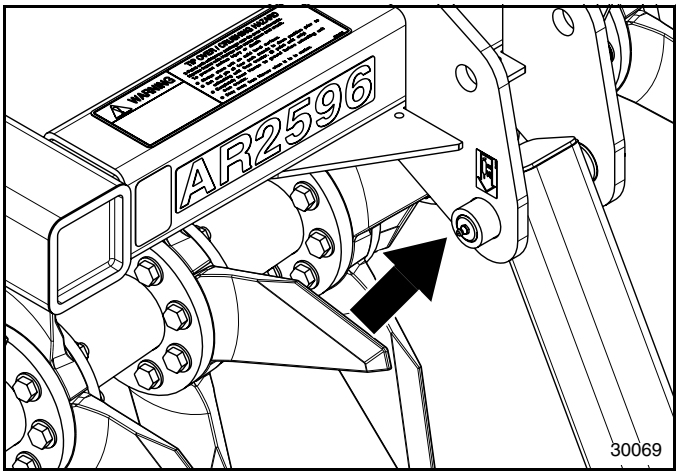

25 Hours

Rear Axle Pivot Pins

2 - Zerks

Type of Lubrication: Grease

Quantity = as needed

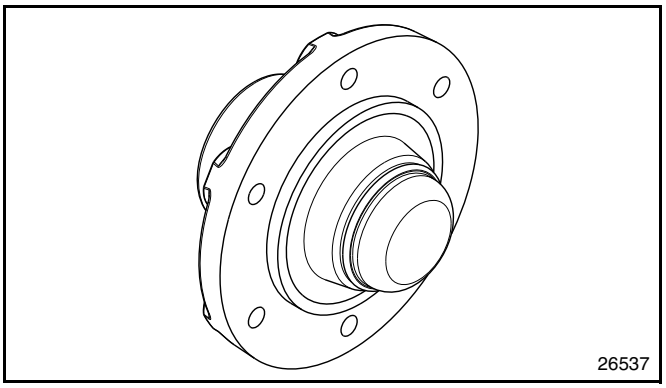

Repack Annually

Wheel Hub

Repack wheel bearings annually

Type of Lubrication: Multi-purpose Grease
Quantity = as needed

AR25 Series

Specifications & Capacities		
Model No.	**AR2596**	**AR2510**
Horsepower requirements	40 - 250 hp (29.8 - 186.4 kW)	
Working width	7' - 2" (2.18 m)	9' - 8" (2.95 m)
Overall width	8' - 1 3/8" (2.47 m)	10' - 8" (3.25 m)
Overall length	10' - 11" (3.33 m)	10' - 11" (3.33 m)
Overall height (With tines on the ground)	41 1/4" (105 cm) Without concrete Blocks 43 7/8" (111 cm) With Optional Concrete Blocks	41 1/4" (105 cm) Without concrete Blocks 43 7/8" (111 cm) With Optional Concrete Blocks
Weight (w/o added weight)	1,700 lbs (771 kg)	2,200 lbs (998 kg)
Tongue weight	490 lbs (222 kg)	580 lbs (263 kg)
Number of tines	24 LH and 24 RH (Four per hub)	32 LH and 32 RH (Four per hub)
Tine material	Forged and heat treated through steel	
Tine hub spacing	7 1/2" (19 cm)	
Tine penetration	Up to 8" (20 cm) Depending on ground conditions and added weight)	
Frame construction	4 x 4 tubing all welded construction	
Hitch type	Heavy duty pull type with clevis hitch Receives up to 1 1/4" pin dia. (2-positions)	
Main tongue beam	4" x 4" x 5/16" Wall tubing	
Hitch jack	Tongue support jack (5,000 lb (2268 kg) load rating) (Stores on pull frame)	
Rotor/tine support hangers	Heavy Duty	
Rotor bearings	Heavy Duty greasable bearings with triple lip seals	
Rotor bearing protection	Bump Guards	
Rotor angle adjustment	Angles from 2 1/2, 5 & 7 1/2 degrees	
Manual storage tube	Included	
Tires	2 ea., 9.5 L x 15, 8 ply	
Rims	6-bolt	
Tine depth control	Add cylinder donuts to cylinder rod - included	
Hydraulic couplings	Quick disconnects included	
Hydraulic cylinder	3" x 8" stroke with 1 1/4" rod dia.	
Transport lock	Manual cylinder lock	
Rear axle pivot	Greasable	
Options		
Concrete blocks	25" (63.5 cm) square x 18" (46 cm) high	
Number of concrete blocks	Available in quantities of 2 or 3	Available in quantities of 2, 3, or 4
Weight per concrete block	740 lbs (1880 kg)	
Lifting bar	1/2" (13 mm) Round bar built in concrete block	
Drag Harrow	See Drag Harrow Operator's Manual 322-207M for a complete list of specifications. (Order model DRG08 as a stand alone unit.)	
Weight	DRG08 = 185 lbs (84 kg)	
Settings	Three positions: Light, Medium, and Aggressive	
Drag Harrow Lift	Can be added to lift Drag Harrow off the ground without getting off the tractor. Drag Harrow sold separately,	
weight	345 lbs (157 kg)	
Hydraulic cylinder	2" x 8" stroke with 1 1/8" rod dia.	
Transport lock	Included	
Slow moving vehicle sign	Included	
Accessories		
Trailing hitch	Self leveling (Buy through Parts, part no. 325-118A)	
Corner protector	Protects straps from concrete corners (Buy through Parts, part no. 816-646C)	

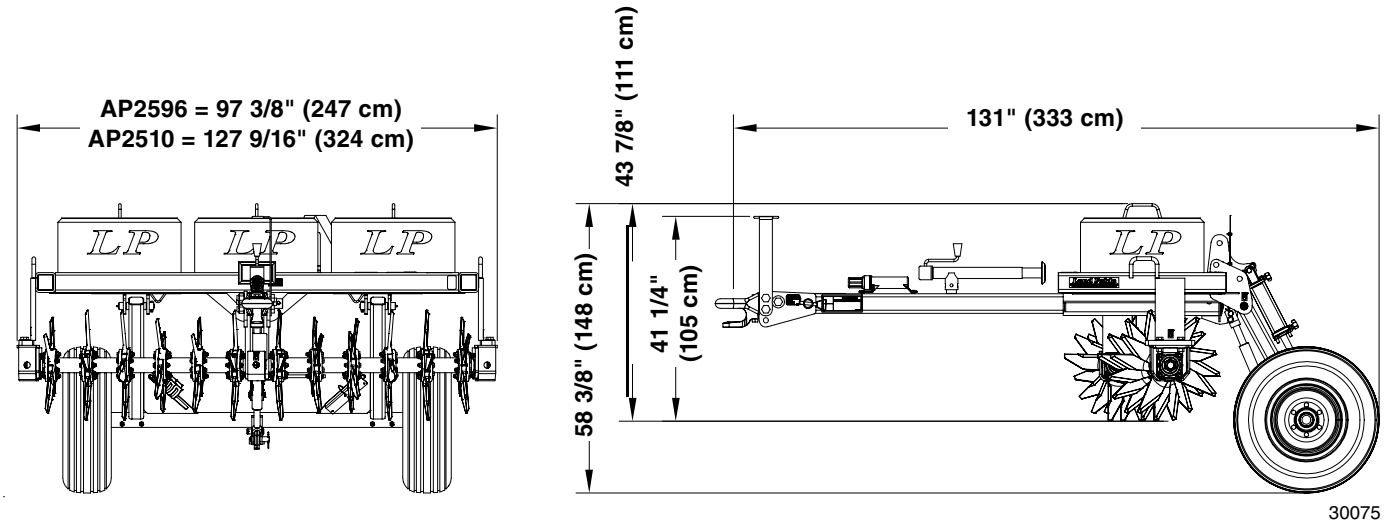
AP2596 = 97 3/8" (247 cm)
AP2510 = 127 9/16" (324 cm)
43 7/8" (111 cm)
131" (333 cm)
58 3/8" (148 cm)
41 1/4"
(105 cm)
LP
LP
LP
LP
30075

AR2596 and AR2510 Models

Features	Benefits
All welded 4 x 4 tubing frame	Makes for a very strong frame.
4 x 4 x 5/16 Tongue with clevis hitch	Built heavy duty to withstand side loads from the tines.
Forged and heat treated through steel tines	Forged and heat treated tines are very resistant to wear and breakage giving them a long life.
Tines	Tines are designed with a twist to lift while fracturing the soil sideways.
Bolt-on tines (2 bolts per tine)	Tines are easily replaceable with 2 bolts per tine.
Maximum tine penetration into the ground is 8" (20 cm)	Great penetration for aerating the soil. (Actual penetration depth is dependent on ground condition and added weight.)
Heavy duty rotary tine hangers	Designed to stand up to the rigors of hard rocky soil.
Bearings are protected with 3/8" skid shoes on 3-sides	Protects bearings against hitting solid objects such as rocks and stumps. (Skid shoe protection is located on the front, bottom, and back sides of bearings)
Adjustable rotors	Rotors can be adjusted from 2 1/2, 5 and 7 1/2 degrees to meet customers needs. The greater the angle the harsher the shattering of soil.
7 1/2" Tine spacing (4/per spool) AR2596 = 48 tines total AR2510 = 64 tines total	Tines spaced 7 1/2" (19 cm) apart provides good coverage.
Optional weights constructed of 740 lbs (.336 kgs) concrete blocks with lifting lugs built in	AR2596 accepts up to 3 concrete blocks and AR2510 accepts up to 4 concrete blocks. Helps Aerator tines penetrate the ground.
Harrow Lift Package (Optional)	Lifts the Drag Harrow off the ground for transporting on roadways.
Drag Harrow (Accessory)	Provides a means to smooth out the ground behind the Aerator. Drag Harrow has three positions it can be used: Drag Mat, Light Penetration and Deep Penetration.
Trailing Hitch (Accessory)	Hitch is self leveling for pulling implements behind the Aerator.

AR25 Series Troubleshooting Chart

Problem	Cause	Solution
Tillage depth is insufficient	Not enough weight in the weight tray.	Add weight to the weight tray.
	Ground is too hard.	Irrigate field or wait for a rain.
	Ground speed is too fast.	Decrease ground speed.
	Aerator is set too high.	Remove one or more cylinder stops.
	Tines are worn or bent.	Replace tines.
	Tines are incorrectly installed.	Check placement of tine cutting edge.
	Obstacles are entangled in tines and/or rotor.	Clear rotor and/or tines of obstacles.
	Tractor has insufficient power.	Shift to a lower gear and Increase tractor rpm.
Tines balling up with soil	Soil is too wet.	Wait until soil dries.
	Rotor is plugged with trash.	Remove trash from rotor.
	Tines are worn or bent.	Replace tines.
	Tines are incorrectly installed.	Install tines correctly.
	Tractor speed is too fast.	Decrease tractor speed.
Rotor will not turn	Obstacles are entangled in tines and/or rotor.	Clear rotor and/or tines of obstacles.
	Rotor is plugged with trash.	Remove trash from rotor.
Aerator is bouncing on the ground	Obstacles are entangled in tines and/or rotor.	Clear rotor and/or tines.
	Tines are not installed correctly.	Install tines correctly.
Tines breaking or bent sideways	Making too sharp a turn with tines in the ground.	Raise Aerator out of the ground to make sharp turns.
	Hit a solid object.	Avoid hitting solid objects.
Bending frame and/or tines	Operating Aerator over concrete, asphalt, tree stumps, rocks, curbs and other solid objects.	Do not operate Aerator over solid objects.
	Too much weight in the weight tray.	AR2596: Do not exceed 2,220 lbs (907 kgs). AR2510: Do not exceed 2,960 lbs (1343 kgs).
Aerator makes intermittent clicking noise	Tines are loose.	Tighten tines.

Torque Values Chart for Common Bolt Sizes

Bolt Size (inches)	Bolt Head Identification Grade 2		Grade 5		Grade 8	
in-tpi [1]	N · m [2]	ft-lb [3]	N · m	ft-lb	N · m	ft-lb
1/4" - 20	7.4	5.6	11	8	16	12
1/4" - 28	8.5	6	13	10	18	14
5/16" - 18	15	11	24	17	33	25
5/16" - 24	17	13	26	19	37	27
3/8" - 16	27	20	42	31	59	44
3/8" - 24	31	22	47	35	67	49
7/16" - 14	43	32	67	49	95	70
7/16" - 20	49	36	75	55	105	78
1/2" - 13	66	49	105	76	145	105
1/2" - 20	75	55	115	85	165	120
9/16" - 12	95	70	150	110	210	155
9/16" - 18	105	79	165	120	235	170
5/8" - 11	130	97	205	150	285	210
5/8" - 18	150	110	230	170	325	240
3/4" - 10	235	170	360	265	510	375
3/4" - 16	260	190	405	295	570	420
7/8" - 9	225	165	585	430	820	605
7/8" - 14	250	185	640	475	905	670
1" - 8	340	250	875	645	1230	910
1" - 12	370	275	955	705	1350	995
1-1/8" - 7	480	355	1080	795	1750	1290
1-1/8" - 12	540	395	1210	890	1960	1440
1-1/4" - 7	680	500	1520	1120	2460	1820
1-1/4" - 12	750	555	1680	1240	2730	2010
1-3/8" - 6	890	655	1990	1470	3230	2380
1-3/8" - 12	1010	745	2270	1670	3680	2710
1-1/2" - 6	1180	870	2640	1950	4290	3160
1-1/2" - 12	1330	980	2970	2190	4820	3560

Bolt Size (Metric)	Bolt Head Identification 5.8 Class 5.8		8.8 Class 8.8		10.9 Class 10.9	
mm x pitch [4]	N · m	ft-lb	N · m	ft-lb	N · m	ft-lb
M 5 X 0.8	4	3	6	5	9	7
M 6 X 1	7	5	11	8	15	11
M 8 X 1.25	17	12	26	19	36	27
M 8 X 1	18	13	28	21	39	29
M10 X 1.5	33	24	52	39	72	53
M10 X 0.75	39	29	61	45	85	62
M12 X 1.75	58	42	91	67	125	93
M12 X 1.5	60	44	95	70	130	97
M12 X 1	90	66	105	77	145	105
M14 X 2	92	68	145	105	200	150
M14 X 1.5	99	73	155	115	215	160
M16 X 2	145	105	225	165	315	230
M16 X 1.5	155	115	240	180	335	245
M18 X 2.5	195	145	310	230	405	300
M18 X 1.5	220	165	350	260	485	355
M20 X 2.5	280	205	440	325	610	450
M20 X 1.5	310	230	650	480	900	665
M24 X 3	480	355	760	560	1050	780
M24 X 2	525	390	830	610	1150	845
M30 X 3.5	960	705	1510	1120	2100	1550
M30 X 2	1060	785	1680	1240	2320	1710
M36 X 3.5	1730	1270	2650	1950	3660	2700
M36 X 2	1880	1380	2960	2190	4100	3220

[1] in-tpi = nominal thread diameter in inches-threads per inch

[2] N· m = newton-meters

[3] ft-lb= foot pounds

[4] mm x pitch = nominal thread diameter in millimeters x thread pitch

Torque tolerance + 0%, -15% of torquing values. Unless otherwise specified use torque values listed above.
All locknuts or lubricated fasteners: Use 75% of torque value. (i.e. 1/2"-13 GR5 = 76 ft-lb; 75% of 76 or .75 x 76 = 57 ft-lb)

Additional Torque Values

Tine Bolts, 1/2"-20 x 3" GRL9	105 ft-lbs (142 Nm)

Tire Inflation Chart

Tire Size	Inflation
9.5L x 15 x 8 ply Rib Implement	**44 psi (3.034 Bar)**

Warranty

Land Pride warrants to the original purchaser that this Land Pride product will be free from defects in material and workmanship beginning on the date of purchase by the end user according to the following schedule when used as intended and under normal service and conditions for personal use.

Overall Unit: One year Parts and Labor

Hydraulic Cylinder: One year Parts and Labor.

Hoses, seals and Tines: Considered wear items.

This Warranty is limited to the repair or replacement of any defective part by Land Pride and the installation by the dealer of any such replacement part, and does not cover common wear items. Land Pride reserves the right to inspect any equipment or parts which are claimed to have been defective in material or workmanship.

This Warranty does not apply to any part or product which in Land Pride's judgment shall have been misused or damaged by accident or lack of normal maintenance or care, or which has been repaired or altered in a way which adversely affects its performance or reliability, or which has been used for a purpose for which the product is not designed. Misuse also specifically includes failure to properly maintain oil levels, grease points, and driveline shafts.

Claims under this Warranty should be made to the dealer which originally sold the product and all warranty adjustments must be made through an authorized Land Pride dealer. Land Pride reserves the right to make changes in materials or design of the product at any time without notice.

This Warranty shall not be interpreted to render Land Pride liable for damages of any kind, direct, consequential, or contingent to property. Furthermore, Land Pride shall not be liable for damages resulting from any cause beyond its reasonable control. This Warranty does not extend to loss of crops, any expense or loss for labor, supplies, rental machinery or for any other reason.

No other warranty of any kind whatsoever, express or implied, is made with respect to this sale; and all implied warranties of merchantability and fitness for a particular purpose which exceed the obligations set forth in this written warranty are hereby disclaimed and excluded from this sale.

This Warranty is not valid unless registered with Land Pride within 30 days from the date of original purchase.

IMPORTANT: The Online Warranty Registration should be completed by the dealer at the time of purchase. This information is necessary to provide you with quality customer service.

Model Number _____ **Serial Number** _____

Corporate Office: P.O. Box 5060
Salina, Kansas 67402-5060 USA
www.landpride.com