Table of Contents

Rotary Tillers

RTR0542 & RTR0550

39239

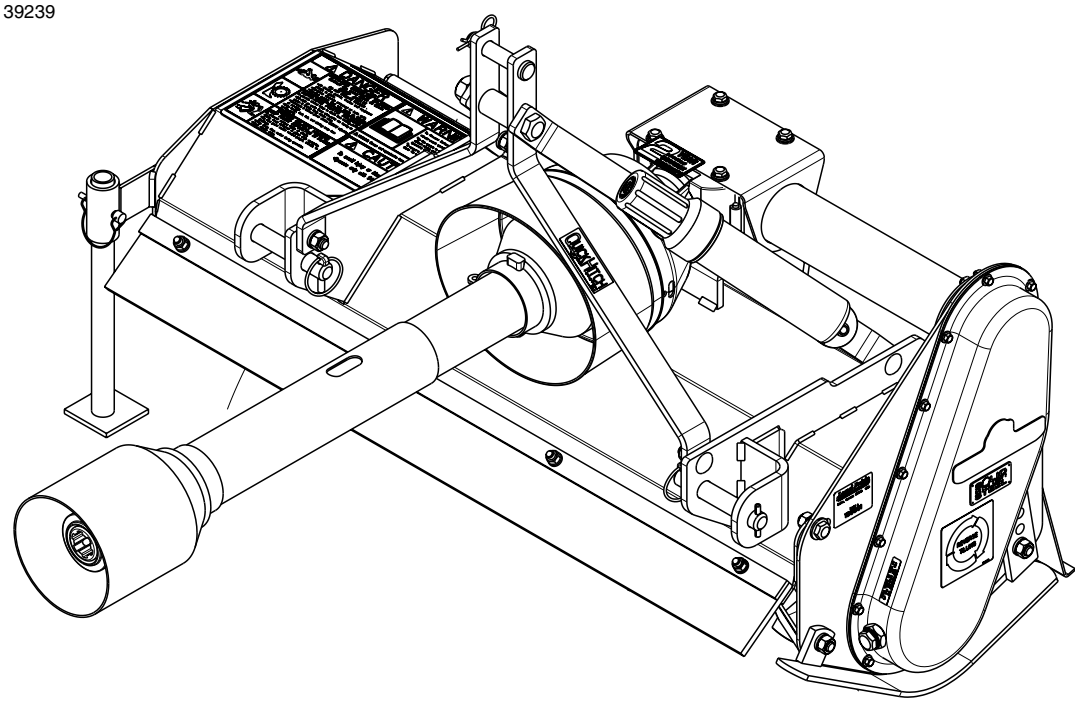

311-464M
Operator's Manual

Read the Operator's Manual entirely. When you see this symbol, the subsequent instructions and warnings are serious - follow without exception. Your life and the lives of others depend on it!

Cover photo may show optional equipment not supplied with standard unit.

For an Operator's Manual and Decal Kit in French Language, please see your Land Pride dealer.

Printed 2/12/24

Machine Identification

Record your machine details in the log below. If you replace this manual, be sure to transfer this information to the new manual.

If you, or the dealer, have added Options not originally ordered with the machine, or removed Options that were originally ordered, the weights and measurements are no longer accurate for your machine. Update the record by adding the machine weight and measurements provided in the Specifications & Capacities Section of this manual with the Option(s) weight and measurements.

Model Number	
Serial Number	
Machine Height	
Machine Length	
Machine Width	
Machine Weight	
Delivery Date	
First Operation	
Accessories	_____ _____ _____

Dealer Contact Information

Name: _____

Street: _____

City/State: _____

Telephone: _____

Email: _____

California Proposition 65

WARNING: Cancer and reproductive harm - www.P65Warnings.ca.gov

Important Safety Information 1
Safety at All Times 1
Look for the Safety Alert Symbol 1
Safety Labels 6
Introduction 8
Application 8
Using This Manual 8
Owner Assistance 8
Section 1: Assembly & Set-Up 9
Dealer Preparations 9
Tractor Requirements 9
Torque Requirements 9
Tractor Shutdown Procedure 9
Park Stand Adjustment 10
3-Point Hitch Assembly 10
Driveline Installation 11
Deflector Chain 11
Tractor Hook-Up 12
3-Point Category I Quick Hitch 12
Park Stand Storage 12
3-Point Hitch Checks 13
Driveline Hook-Up 13
Check Driveline Collapsible Length 14
Assemble Inner & Outer Driveline Halves 14
Check Driveline Interference 15
Section 2: Operating 16
Operating Checklist 16
Inspections 16
Safety Information 16
Transporting 18
Unhook Rotary Tiller 18
General Operating Notes 19
General Operating Instructions 19
Section 3: Adjustments 20
3-Point Hitch Adjustment 20
Drive Chain Tension Adjustment 20
Rear Deflector Adjustment 20
Skid Shoe Adjustment 20
Section 4: Maintenance & Lubrication 21
Maintenance 21
Driveline Maintenance 21
Remove Driveline 21
Driveline with Shear Bolt Clutch 22
Driveline With Slip Clutch 22
Clutch Run-In 22
Disassemble, Inspect & Reassemble 23
Tine Replacement 24
Long-Term Storage 24
Ordering Replacement Parts 24
Lubrication Points 25
Driveline U-Joint 25
Driveline Shaft 25
Chaincase 25
Bearing On Right End Of Rotor Shaft 26
Gearbox 26
Gearbox Input Shaft 26
Section 5: Specifications & Capacities 27
Section 6: Features & Benefits 28
Section 7: Troubleshooting 29
Section 8: Torque Values Chart 30
Section 9: Warranty 31

Printed in the United States of America.

See previous page for Table of contents.

Parts Manual QR Locator

The QR (Quick Reference) code on the left will take you to the Parts Manual for this equipment. Download the appropriate app on your smart phone. Scan the QR code and take a picture.

Dealer QR Locator

The QR code to the left will link you to available dealers for Land Pride products. Refer to Parts Manual QR Locator on this page for detailed instructions.

Listed below are common practices that may or may not be applicable to the products described in this manual.

Safety at All Times

Careful operation is your best assurance against an accident.

All operators, no matter how much experience they may have, should carefully read this manual and other related manuals before operating the power machine and this implement.

- ▲ Thoroughly read and understand the "Safety Label" section. Read all instructions noted on them.
- ▲ Do not operate the equipment while under the influence of drugs or alcohol, as they impair your ability to safely and properly operate the equipment.
- ▲ The operator should be familiar with all functions of the tractor and attached implement, and be able to handle emergencies quickly.
- ▲ Make sure all guards and shields appropriate for the operation are in place and secured before operating the implement.
- ▲ Keep all bystanders away from equipment and work area.
- ▲ Start tractor from the driver's seat with hydraulic controls in neutral.
- ▲ Operate tractor and controls from the driver's seat only.
- ▲ Never dismount from a moving tractor or leave tractor unattended with engine running.
- ▲ Do not allow anyone to stand between the implement and tractor while backing up to the implement.
- ▲ Keep hands, feet, and clothing away from power-driven parts.
- ▲ While transporting and operating equipment, watch out for objects overhead and along the sides such as fences, trees, buildings, wires, etc.
- ▲ Do not turn tractor so tight as to cause hitched implement to ride up on the tractor's rear wheel.
- ▲ Store implement in a safe and secure area where children normally do not play. When needed, secure implement against falling with support blocks.

Look for the Safety Alert Symbol

The SAFETY ALERT SYMBOL indicates there is a potential hazard to personal safety and extra precaution must be taken. When you see this symbol, be alert and carefully read the message that follows it. Hazard control, and accident prevention are dependent upon the awareness, concern, prudence, and proper training of personnel involved in the operation, transport, maintenance, and storage of equipment.

Be Aware of Signal Words

A signal word designates a degree or level of hazard seriousness. They are:

DANGER: Indicates a hazardous situation that, if not avoided, will result in death or serious injury.

WARNING: Indicates a hazardous situation that, if not avoided, could result in death or serious injury.

CAUTION: Indicates a hazardous situation that, if not avoided, may result in minor or moderate injury.

Be Aware of Special Notices

Special notices are intended to point out important and helpful information that should be followed. They are usually placed inside a box. They are:

IMPORTANT: Indicates that equipment or property damage could result if instructions are not followed.

NOTE: Indicates supplementary explanations that will be helpful when using the equipment.

Safety Precautions for Children

Tragedy can occur if the operator is not alert to the presence of children, Children generally are attracted to implements and their work.

- ▲ Never assume children will remain where you last saw them.
- ▲ Keep children out of the work area and under the watchful eye of a responsible adult.
- ▲ Be alert and shut the implement and tractor down if children enter the work area.
- ▲ Never carry children on the tractor or implement. There is not a safe place for them to ride. They may fall off and be run over or interfere with the control of the power machine.
- ▲ Never allow children to operate the power machine, even under adult supervision.
- ▲ Never allow children to play on the power machine or implement.
- ▲ Use extra caution when backing up. Before the tractor starts to move, look down and behind to make sure the area is clear.

Tractor Shutdown & Storage

- ▲ If engaged, disengage power take-off.
- ▲ Park on solid, level ground and lower implement to ground or onto support blocks.
- ▲ Put tractor in park or set park brake.
- ▲ Turn off engine and remove ignition key to prevent unauthorized starting.
- ▲ Relieve all hydraulic pressure to auxiliary hydraulic lines.
- ▲ Wait for all components to stop before leaving operator's seat.
- ▲ Use steps, grab-handles and anti-slip surfaces when stepping on and off the tractor.

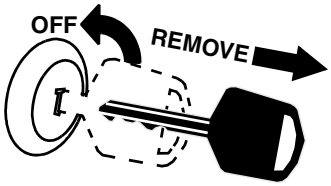

Listed below are common practices that may or may not be applicable to the products described in this manual.

Use A Safety Chain

- ▲ A safety chain will help control drawn machinery should it separate from the tractor drawbar.
- ▲ Use a chain with the strength rating equal to or greater than the gross weight of the towed implement.
- ▲ Attach the chain to the tractor drawbar support or other specified anchor location. Allow only enough slack in the chain to permit turning.
- ▲ Always hitch the implement to the machine towing it. Do not use the safety chain to tow the implement.

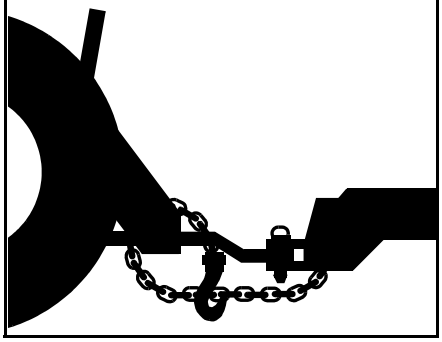

Towing Safely

- ▲ Comply with federal, state, and local laws.
- ▲ Use towing vehicle and trailer of adequate size and capacity. Secure equipment towed on a trailer with chocks, tie downs, and chains.
- ▲ **IMPORTANT:** Do not tow a load that is more than double the weight of the vehicle towing the load.
- ▲ Sudden braking can cause a towed trailer to swerve unexpectedly. Reduce speed if trailer is not equipped with brakes.

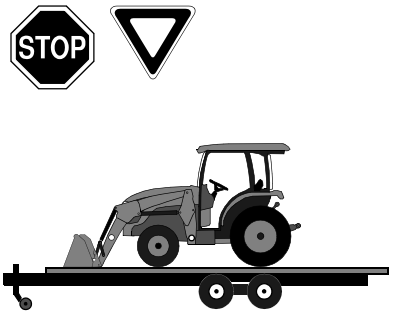

Transport Safely

- ▲ Comply with federal, state, and local laws.
- ▲ Avoid contact with any overhead utility lines or electrically charged conductors.
- ▲ Engage park brake when stopped on an incline.
- ▲ Maximum transport speed for an implement is 20 mph (32 km/h). DO NOT EXCEED.
- ▲ Never travel at a speed which does not allow adequate control of steering and stopping. Some rough terrains require a slower speed. Sudden braking can cause a towed load to swerve and upset.
- ▲ Do not tow an implement that, when fully loaded, weights more than 1.5 times the weigh of towing vehicle.

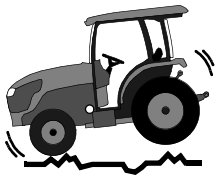

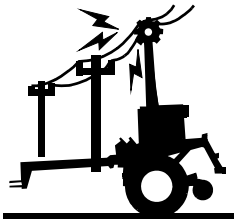

Tire Safety

- ▲ Tire changing can be dangerous and must be performed by trained personnel using the correct tools and equipment.
- ▲ Always properly match the wheel size to the properly sized tire.
- ▲ Always maintain correct tire pressure. Do not inflate tires above recommended pressures shown in the Operator's Manual.
- ▲ When inflating tires, use a clip-on chuck and extension hose long enough to allow you to stand to one side and NOT in front of or over the tire assembly. Use a safety cage if available.
- ▲ Securely support the implement when changing a wheel.
- ▲ When removing and installing wheels, use wheel handling equipment adequate for the weight involved.
- ▲ Make sure wheel bolts have been tightened to the specified torque.

Practice Safe Maintenance

- ▲ Understand procedure before doing work. Refer to the Operator's Manual for additional information.
- ▲ Work on a level surface in a clean dry area that is well-lit.
- ▲ Lower implement to the ground and follow all shutdown procedures before leaving the operator's seat to perform maintenance.
- ▲ Do not work under any hydraulically supported equipment. It can settle, suddenly leak down, or be lowered accidentally. If it is necessary to work under the equipment, securely support it with stands or suitable blocking beforehand.
- ▲ Use properly grounded electrical outlets and tools.
- ▲ Use correct tools and equipment for the job that are in good condition.
- ▲ Allow equipment to cool before working on it.
- ▲ Disconnect battery ground cable (-) before servicing or adjusting electrical systems or before welding on implement.
- ▲ Inspect all parts. Make certain parts are in good condition & installed properly.
- ▲ Replace parts on this implement with genuine Land Pride parts only. Do not alter this implement in a way which will adversely affect its performance.
- ▲ Do not grease or oil implement while it is in operation.
- ▲ Remove buildup of grease, oil, or debris.
- ▲ Always make sure any material and waste products from the repair and maintenance of the implement are properly collected and disposed.
- ▲ Remove all tools and unused parts from equipment before operation.
- ▲ Do not weld or torch on galvanized metal as it will release toxic fumes.

Listed below are common practices that may or may not be applicable to the products described in this manual.

Prepare for Emergencies

- ▲ Be prepared if a fire starts.
- ▲ Keep a first aid kit and fire extinguisher handy.
- ▲ Keep emergency numbers for doctor, ambulance, hospital, and fire department near the phone.

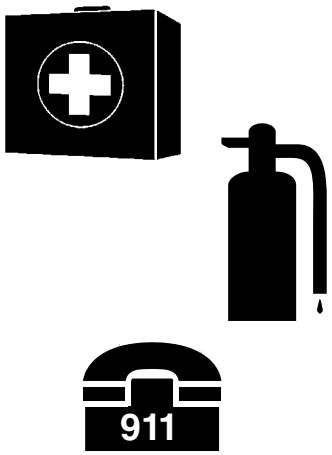

Wear Personal Protective Equipment (PPE)

- ▲ Wear protective clothing and equipment appropriate for the job such as safety shoes, safety, glasses, hard hat, dust mask, and ear plugs.
- ▲ Clothing should fit snug without fringes and pull strings to avoid entanglement with moving parts.
- ▲ Prolonged exposure to loud noise can cause hearing impairment or hearing loss. Wear suitable hearing protection such as earmuffs or earplugs.
- ▲ Operating a machine safely requires the operator's full attention. Avoid wearing headphones while operating equipment.

Avoid High Pressure Fluids

- ▲ Escaping fluid under pressure will penetrate the skin or eyes causing serious injury.
- ▲ Relieve all residual pressure before disconnecting hydraulic lines or performing work on the hydraulic system.
- ▲ Make sure all hydraulic fluid connections are properly tightened/torqued and all hydraulic hoses and lines are in good condition before applying pressure to the system.
- ▲ Use a piece of paper or cardboard, NOT BODY PARTS, to check for suspected leaks.
- ▲ Wear protective gloves and safety glasses or goggles when working with hydraulic systems.
- ▲ **DO NOT DELAY.** If an accident occurs, seek immediate emergency medical care or gangrene may result.

Use Safety Lights and Devices

- ▲ A slow moving power machine can create a hazard when driven on public roads. They are difficult to see, especially at night.
- ▲ Flashing warning lights and turn signals are recommended whenever driving on public roads.
- ▲ For tractors and other agriculture equipment, a Slow Moving Vehicle (SMV) sign is required when traveling on public roads.

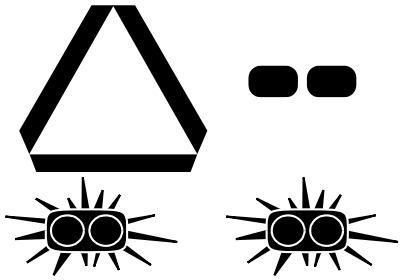

Use Seat Belt and ROPS

- ▲ Land Pride recommends the use of a CAB or roll-over-protective-structures (ROPS) and seat belt in almost all power machines. Combination of a CAB or ROPS and seat belt will reduce the risk of serious injury or death if the power machine should be upset.
- ▲ If ROPS is in the locked-up position, fasten seat belt snugly and securely to help protect against serious injury or death from falling and machine overturn.

Keep Riders Off Machinery

- ▲ Never carry riders on the tractor or implement.
- ▲ Riders obstruct operator's view and interfere with the control of the power machine.
- ▲ Riders can be struck by objects or thrown from the equipment.
- ▲ Never use the tractor or implement to lift or transport riders.

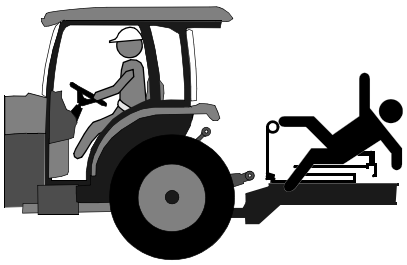

Listed below are common practices that may or may not be applicable to the products described in this manual.

Avoid Crystalline Silica (Quartz) Dust

Because crystalline silica is a basic component of sand and granite, many activities at construction sites produce dust containing crystalline silica. Trenching, sawing, and boring of material containing crystalline silica can produce dust containing crystalline silica particles. This dust can cause serious injury to the lungs (silicosis).

There are guidelines which should be followed if crystalline silica (quartz) is present in the dust.

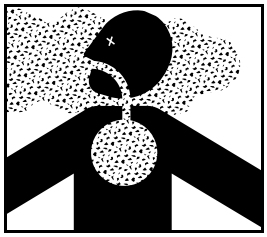

- ▲ Be aware of and follow OSHA (or other local, State, or Federal) guidelines for exposure to airborne crystalline silica.
- ▲ Know the work operations where exposure to crystalline silica may occur.
- ▲ Participate in air monitoring or training programs offered by the employer.
- ▲ Be aware of and use optional equipment controls such as water sprays, local exhaust ventilation, and enclosed cabs with positive pressure air conditioning if the machine has such equipment. Otherwise respirators shall be worn.
- ▲ Where respirators are required, wear a respirator approved for protection against crystalline silica containing dust. Do not alter respirator in any way. Workers who use tight-fitting respirators can not have beards/ mustaches which interfere with the respirator seal to the face.
- ▲ If possible, change into disposable or washable work clothes at the work site; shower and change into clean clothing before leaving the work site.
- ▲ Do not eat, drink, use tobacco products, or apply cosmetics in areas where there is dust containing crystalline silica.
- ▲ Store food, drink, and personal belongings away from the work area.
- ▲ Wash hands and face before eating, drinking, smoking, or applying cosmetics after leaving the exposure area.

Handle Chemicals Properly

- ▲ Protective clothing should be worn.
- ▲ Handle all chemicals with care.
- ▲ Follow instructions on container label.
- ▲ Agricultural chemicals can be dangerous. Improper use can seriously injure persons, animals, plants, soil, and property.
- ▲ Inhaling smoke from any type of chemical fire can be a serious health hazard.
- ▲ Store or dispose of unused chemicals as specified by the chemical manufacturer.

Dig Safe - Avoid Underground Utilities

- ▲ USA: Call 811
  CAN:
  http://www.clickbeforeyoudig.com
- ▲ Always contact your local utility companies (electrical, telephone, gas, water, sewer, and others) before digging so that they may mark the location of any underground services in the area.
- ▲ Be sure to ask how close you can work to the marks they positioned.

This page left blank intentionally.

Safety Labels

Your Rotary Tiller comes equipped with all safety labels in place. They were designed to help you safely operate your implement. Read and follow their directions.

1. *Keep all safety labels clean and legible.*
2. *Refer to this section for proper label placement. Replace all damaged or missing labels. Order new labels from your nearest Land Pride dealer. To find your nearest dealer, visit our dealer locator at www.landpride.com.*
3. *Some new equipment installed during repair requires safety labels to be affixed to the replaced component as specified by Land Pride. When ordering new components make sure the correct safety labels are included in the request.*
4. *Refer to this section for proper label placement.*
   To install new labels:
   a. *Clean surface area where label is to be placed.*
   b. *Spray soapy water onto the cleaned area.*
   c. *Peel backing from label and press label firmly onto the surface.*
   d. *Squeeze out air bubbles with edge of a credit card or with a similar type of straight edge.*

39236

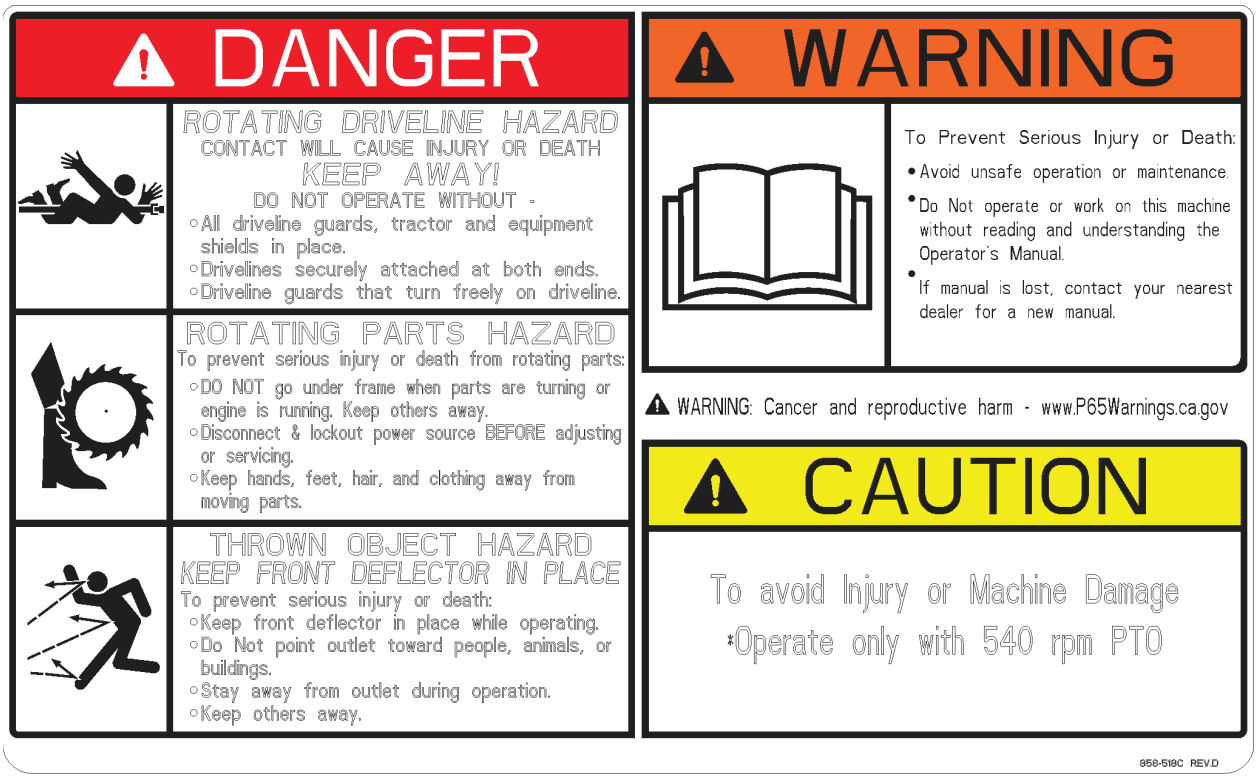

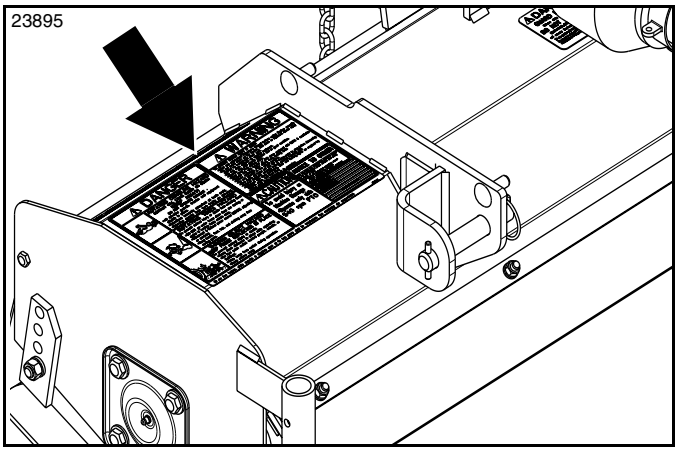

858-518C

Danger/Warning/Caution Combo: List of Safety Hazards

1 Place

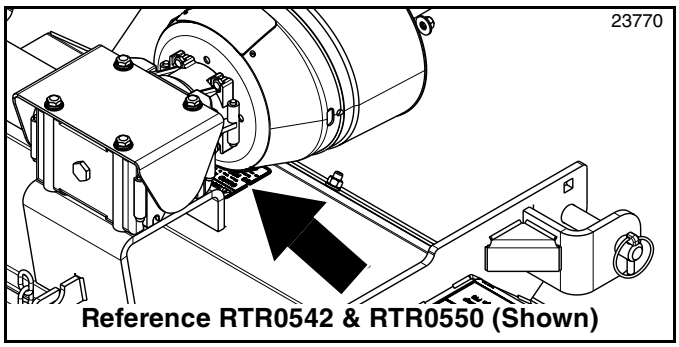

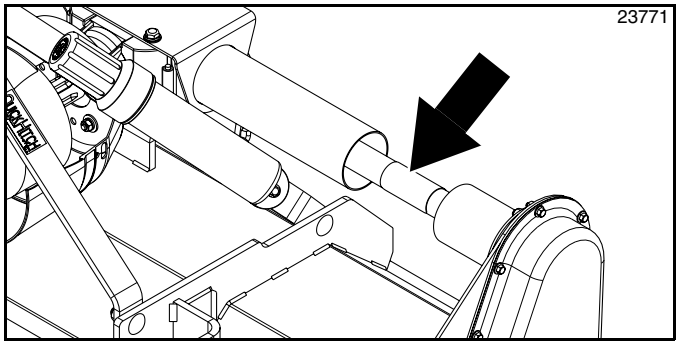

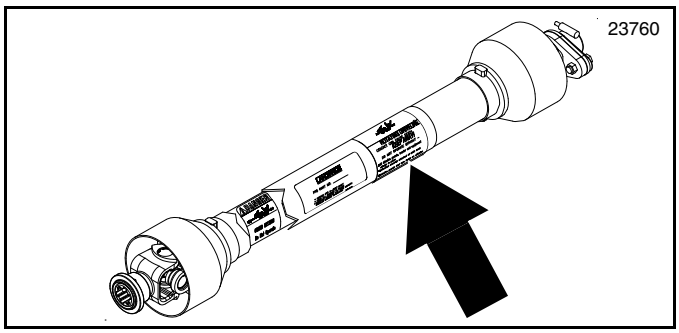

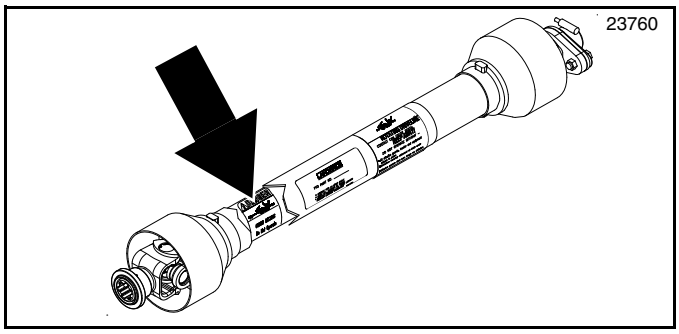

70358

818-543C
Danger: Guard Missing Hazard - Do not Operate
1 Place

70375

818-552C
Danger: Rotating Driveline - Keep Away
1 Place

70374

818-540C
Danger: Guard Missing - DO NOT Operate
1Place

Land Pride Land Pride welcomes you to the growing family of new product owners. This Rotary Tiller has been designed with care and built by skilled workers using quality materials. Proper assembly, maintenance, and safe operating practices will help you get years of satisfactory use from this tiller.

Application

The RTR05 Series Reverse-Till Rotary Tillers are designed and built by Land Pride to till soil for seedbed or planting preparation. The RTR05 Series tillers are adapted for tractors with 540 rpm power take-off speed and Category I 3-Point hitch on tractors in the 17-26 hp (12.7-19.4 kW) range. The RTR05 Series are Quick Hitch adaptable.

Reverse rotation tillers tend to achieve greater depth penetration, moving, and pulverizing more soil in the process, while burying residue as opposed to leaving it on top. RTR05 Series Land Pride Tillers have applications in landscaping, small nurseries, gardens, or small hobby farms.

See **"Specifications & Capacities"** on page 27 and **"Features & Benefits"** on page 28 for additional information and performance enhancing options.

Using This Manual

- This Operator's Manual is designed to help familiarize the operator with safety, assembly, operation, adjustments, troubleshooting, and maintenance. Read this manual and follow the recommendations to help ensure safe and efficient operation.
- The information contained within this manual was current at the time of printing. Some parts may change slightly to assure you of the best performance.
- To order a new Operator's or Parts Manual, contact your authorized dealer. Manuals can also be downloaded, free-of-charge, from our website at www.landpride.com

Terminology

"Right" or "Left" as used in this manual is determined by the direction the operator faces while sitting in the operator's seat looking forward unless otherwise stated.

Owner Assistance

The dealer should complete the Online Warranty Registration at the time of purchase. This information is necessary to provide you with quality customer service.

The parts on your Rotary Tiller have been specially designed by Land Pride and should only be replaced with genuine Land Pride parts. Contact a Land Pride dealer if customer service or repair parts are required. Your Land Pride dealer has trained personnel, repair parts, and equipment needed to service the implement.

Serial Number

For quick reference and prompt service, record model and serial number on the inside cover page and again on the warranty page. Always provide model number and serial number when ordering parts and in all correspondences with your Land Pride dealer. For location of your serial number plate, see Figure 1.

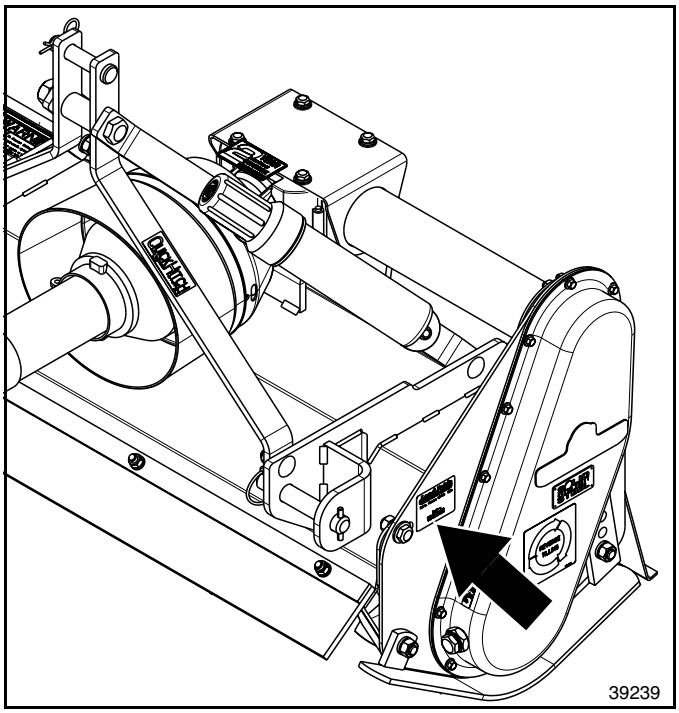

Serial Number Plate Location
Figure 1

Further Assistance

Your dealer wants you to be satisfied with your new Rotary Tiller. If for any reason you do not understand any part of this manual or are not satisfied with the service received, the following actions are suggested:

1. Discuss any problems you have with your implement with your dealership service personnel so they can address the problem.
2. If you are still not satisfied, seek out the owner or general manager of the dealership, explain the question/problem, and request assistance.
3. For further assistance write to:

Land Pride Service Department
1525 East North Street

P.O. Box 5060
Salina, Ks. 67402-5060

E-mail address
lpservicedept@landpride.com

Dealer Preparations

WARNING

To avoid serious injury or death:

An unsupported parked tiller can tip over easily. Always use its park stand and when needed, non-concrete support blocks to keep the tiller from tipping onto a person.

This unit is shipped almost completely assembled. Carefully follow instructions for final assembly.

Before attempting assembly, go through the **"Pre-Assembly Checklist"** below. Having all the needed parts and equipment readily at hand will speed up your assembly task and will make the job as safe as possible.

Pre-Assembly Checklist

✔	Check	Page
☐	Have a forklift or hoist with properly sized chains and safety stands capable of lifting and supporting the equipment on hand.	
☐	Have a minimum of 2 people on hand while assembling.	
☐	Make sure all major components and loose parts are shipped with the machine. Refer to this manual if unsure.	
☐	Make sure working parts move freely, bolts are tight and cotter pins are spread. Refer to this Operator's Manual.	
☐	Double check to make sure all fasteners and pins are installed correctly. Use the Parts Manual if unsure. **NOTE:** Small hardware shipped loose from the factory is contained in a bag. Larger parts are attached to the shipping crate. All factory assembled hardware should be installed in their correct location. Remember their location if removed. Keep removed parts separated.	
☐	Make sure all safety labels are correctly located and legible. Replace if damaged.	Page 6
☐	Make sure all grease fittings are in place and lubricated. Refer Lubrication Points.	Page 25
☐	Check fluid level in the chain cases and gearbox. Refer Lubrication Points.	Page 25 Page 26

Tractor Requirements

Tractor horsepower should be within the range noted below. Tractors outside the horsepower range must not be used. The lower 3-Point arms must be stabilized to prevent side-to-side movement.

Maximum Horsepower . . . . . 26 hp (19.4 kW)
Required power take-off . . . . . 540 rpm
Hitch Type . . . . . 3 - Point Cat.1 or Cat. 1 Quick Hitch

WARNING

To avoid serious injury or death:

Lightweight tractors with rear attached implements may need weights added to the front to maintain steering control. Consult your tractor Operator's Manual to determine weight requirements and maximum limitations.

Torque Requirements

Check to see that all nuts are tightened. Refer to **"Torque Values Chart"** on page 30 to determine correct torque values for common bolts.

Tractor Shutdown Procedure

The following are basic tractor shutdown procedures. Follow these procedures and any additional shutdown procedures provided in your tractor Operator's Manual before leaving the operator's seat.

1. Reduce engine speed and disengage power take-off if engaged.
2. Park tractor and implement on level, solid ground.
3. Lower implement to ground or onto non-concrete support blocks.
4. Put tractor in park or set park brake, turn off engine, and remove switch key to prevent unauthorized starting.
5. Relieve all hydraulic pressure to auxiliary hydraulic lines.
6. Wait for all components to come to a complete stop before leaving the operator's seat.
7. Use steps, grab-handles and anti-slip surfaces when stepping on and off the tractor.

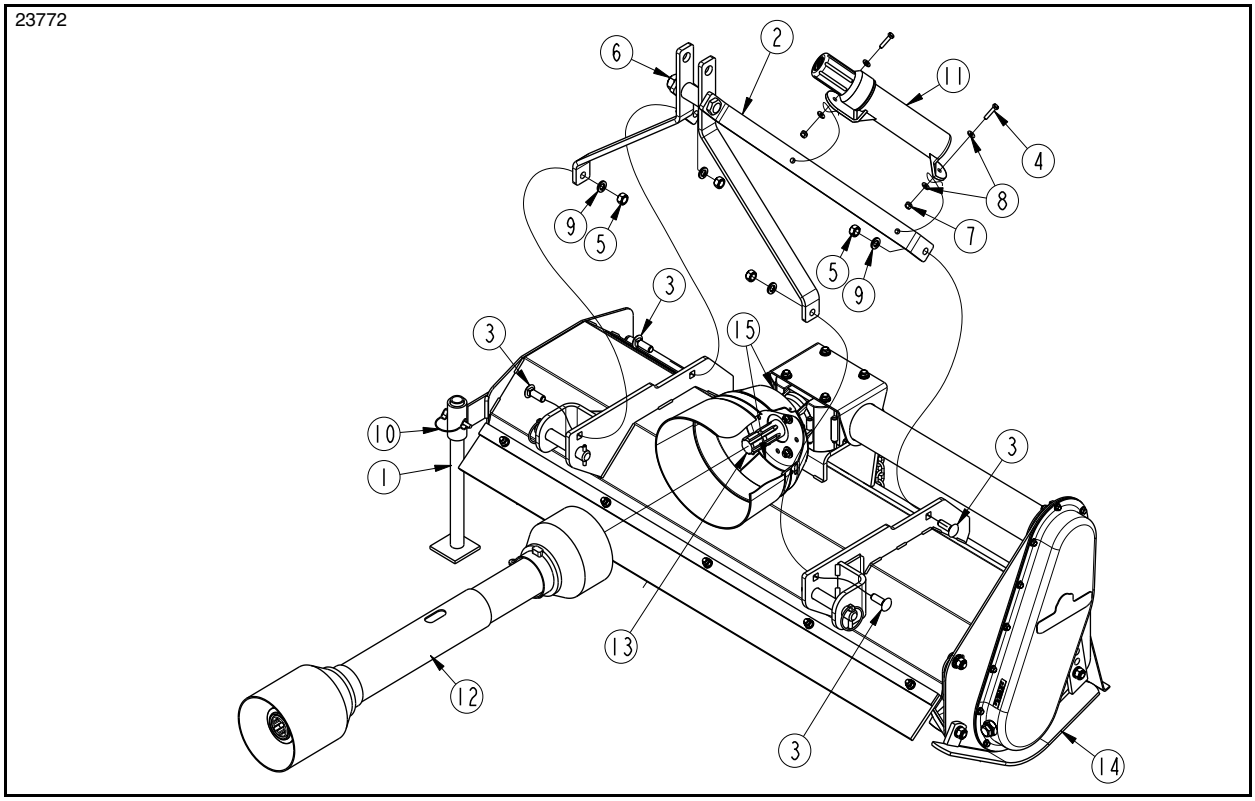

Hitch, Park Stand and Driveline Assembly
Figure 1-1

Park Stand Adjustment

Refer to Figure 1-1:

WARNING

To avoid serious injury or death:

An unsupported parked tiller can tip over easily. Always use its park stand and when needed, non-concrete support blocks to keep the tiller from tipping onto a person.

1. Adjust park stand (#1) to a height that will support the tiller level while resting on its skid shoes (#14).
2. Secure park stand in mounting bracket with 1/4" x 1 3/4" long wire lock pin (#10).

3-Point Hitch Assembly

Refer to Figure 1-1:

1. Attach 3-Point hitch Assembly (#2) to inside of hitch plates with four 1/2" -13 x 1 1/2" GR5 bolts (#3), 1/2" lock washers (#9), and 1/2" hex nuts (#5). Tighten hex nuts (#5) to the correct torque.
2. Tighten 3/4"-10 hex nut (#6) to the correct torque. Nut is installed on 3/4"-10 x 1 3/4" GR5 hex bolt.
3. Attach manual storage tube (#11) to hitch plate (#2) with 1/4"-20 x 1 1/4" GR5 cap screws (#4), flat washers (#8), and hex nylock nuts (#7) as shown. Tighten nylock nuts (#7) to the correct torque.

Driveline Installation

IMPORTANT: The driveline must be lubricated before putting it into service. Refer to **"Lubrication Points"** on page 25.

Refer to Figure 1-2 & Figure 1-3:

The driveline is coupled to the implement's gearbox input shaft with a push pin yoke or a bolt-on yoke.

Refer to Figure 1-1 on page 10:

1. Unsnap access covers (#15). Save covers for reuse.
2. Remove shaft protector from input shaft (#13) and lubricate the input shaft. For lubrication instructions, refer to **"Gearbox Input Shaft"** on page 26.

Refer to Figure 1-2 & Figure 1-3:

3. Attach the driveline to the gearbox input shaft:
   - **Push Pin Yoke:** Push in on the yoke's push pin and slide the yoke onto the gearbox input shaft. Release push pin and continue to slide the yoke onto the shaft until the pin pops out.
   - **Bolt-on Yoke:** Remove nut, lock washer, and bolt from the yoke. Slide bolt-on yoke onto the gearbox input shaft until the bolt hole in the yoke aligns with the notch in the gearbox input shaft. Insert removed bolt and secure bolt with lock washer and nut. Tighten nut to the correct torque.
4. Move driveline yoke back and forth to ensure that the driveline is secured to the gearbox input shaft.
5. If not secured, reattach the push pin and/or bolt-on yoke to the gearbox input shaft.
6. Reattach access covers (#15) to the gearbox shield.

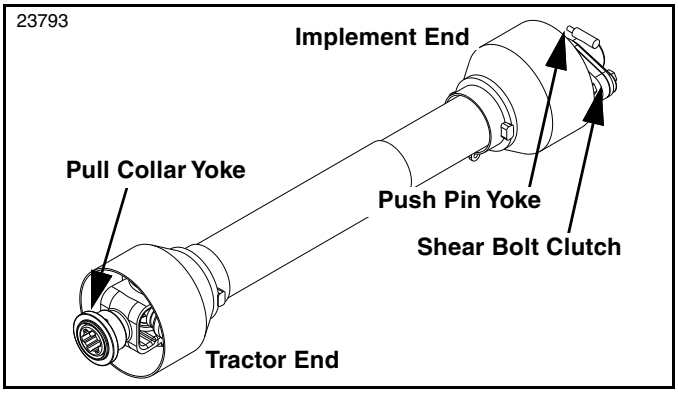

Push Pin Coupling With Shear bolt Protection
Figure 1-2

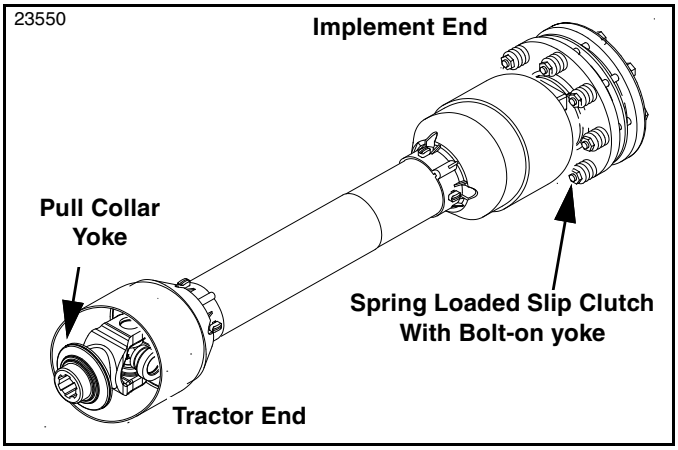

Push Pin Coupling With Slip Clutch Protection
Figure 1-3

Deflector Chain

Refer to Figure 1-4:

1. Remove hex locknuts (#7), flat washers (#6), lock washers (#5) and u-bolt (#3) from rear deflector (#1).
2. Remove hex nut (#4B) from u-bolt (#3).
3. Insert end link of deflector chain (#2) over u-bolt (#3) as shown.
4. Screw hex nut (#4B) on until even with hex nut (#4A).
5. Attach u-bolt (#3) to tailgate (#1) with lock washers (#5), flat washers (#6), and 3/8"-16 hex lock nuts (#7). Tighten locknuts to the correct torque.
6. Hook opposite end of deflector chain (#2) in slot (#8).
7. Refer to **"Rear Deflector Adjustment"** on page 20 for adjustment instructions.

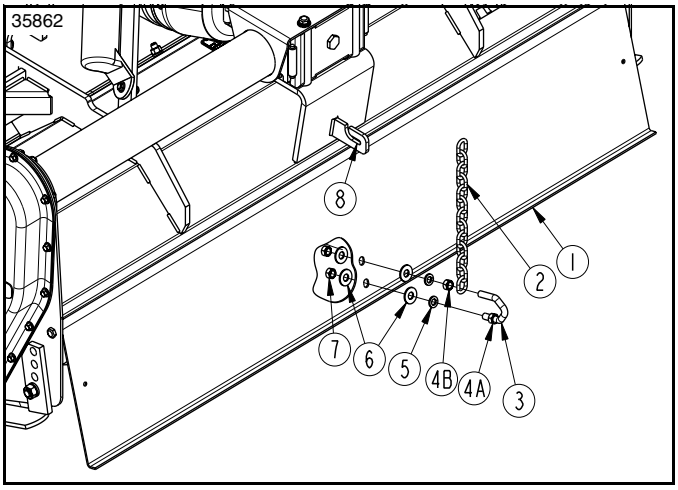

Deflector Chain
Figure 1-4

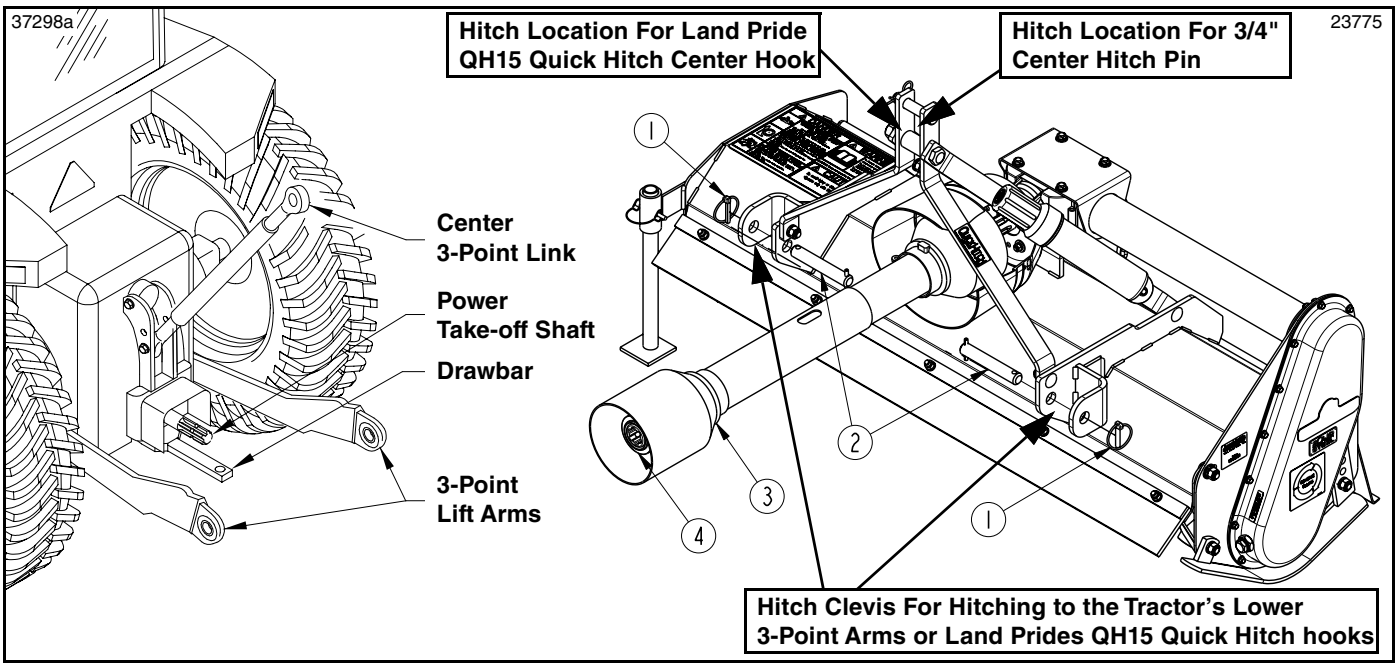

Tractor 3-Point Hitch
Figure 1-5

Tractor Hook-Up

Refer to Figure 1-5:

DANGER

To avoid serious injury or death:

A crushing hazard exists while Connecting and disconnecting the implement. Keep people and animals away while backing-up to the implement or pulling away from the implement. Do not operate hydraulic controls while a person or animal is directly behind the power machine or near the implement.

WARNING

To avoid serious injury or death:

- *An unsupported parked tiller can tip over easily. Always use its park stand and when needed, non-concrete support blocks to keep the tiller from tipping onto a person.*
- *Always follow "Tractor Shutdown Procedure" provided in this manual before dismounting the tractor.*

NOTE: Land Pride's Quick Hitch can be attached to the tractor to provide quick and easy 3-point hook-up and detachment. See your nearest Land Pride dealer to purchase a Quick-Hitch.

1. Stabilize lower 3-Point arms to prevent side-to-side movement. See your tractor Operator's Manual
2. Remove the two 5/16" linchpins (#1) and hitch pins (#2).
3. Slowly back the tractor up to tiller until the lower 3-Point arms are aligned with the hitch clevises on the tiller as shown.
4. Replace the lower hitch pins (#2) and secure with the two 5/16" linchpins (#1).
5. Attach the tractor's top center link to the tiller's 3/4" hitch holes using a 3/4" diameter hitch pin. Properly secure hitch pin with a linchpin.(Center hitch pin and linchpin are supplied by the customer).

3-Point Category I Quick Hitch

Follow all instructions and safety precautions provided in Land Pride's QH15 Quick Hitch Operators Manual No. 320-003M. Also available free-of-charge from our website at www.landpride.com.

Park Stand Storage

Refer to Figure 1-6 on page 13:

WARNING

To avoid serious injury or death:

An unsupported parked tiller can tip over easily. Always use its park stand and when needed, non-concrete support blocks to keep the tiller from tipping onto a person.

IMPORTANT: To prevent damaging the park stand, always store the stand in its transport position before moving the tiller.

1. Slowly raise tiller with tractor's hydraulic 3-Point lift until tines are 1" to 2" (2.5 to 5 cm) above ground.
2. Remove wire retaining pin (#2) and parking stand (#1).
3. Invert park stand (#1) upside down and reinsert it in park stand mounting bracket (#3) as shown. Secure park stand with wire retaining pin (#2).

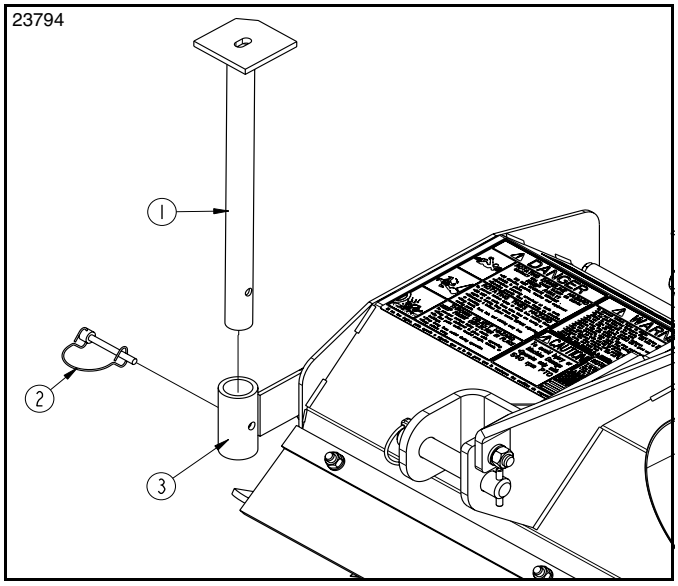

Park Stand in Transport Position
Figure 1-6

3-Point Hitch Checks

1. Ensure that the lower arms are blocked to prevent excessive side movement.
2. Slowly raise tiller with tractor hydraulics until the tines are 1" to 2" (2.5 to 5 cm) above ground.
3. Adjust the tractor's lower lift arms to level the tiller from left to right. **Final leveling adjustments will be made in** the Adjustment Section on page 20.
4. Adjust the top-link so that the tiller is approximately level from front to rear. **Final leveling adjustments will be made in** the Adjustment Section on page 20.
5. Slowly operate the tractor's 3-Point hydraulic control up and down to check for clearance between the tires, frame, drawbar etc.

Driveline Hook-Up

Refer to Figure 1-5:

DANGER

To avoid serious injury or death:

- *Do not engage power take-off while connecting or disconnecting the driveline, or while someone is standing near the driveline. A person's body and/or clothing can become entangled in the driveline.*
- *All guards and shields must be installed and in good working condition while operating the implement.*
- *Do not use a power take-off adapter. The adapter will increase strain on the tractor's power take-off shaft causing possible damage to shaft and driveline. It will also defeat the purpose of the tractor's power take-off shield.*

WARNING

To avoid serious injury or death:

- *Always follow "Tractor Shutdown Procedure" provided in this manual before dismounting the tractor.*
- *Select a safe ground speed that will allow adequate control of steering and stopping. Never exceed 20 mph (32 km/h) with attached equipment. Rough terrain requires a slower speed.*
- *Check driveline when lowering tiller into the ground to make sure it does not interfere with the tractor drawbar at maximum depth. If needed, shut tractor off and move or remove drawbar to prevent damage to the driveline.*

IMPORTANT: An additional driveline may be required if implement is attached to more than one tractor or if a Quick Hitch is used.

IMPORTANT: Drivelines with friction clutches must go through a "run-in" prior to initial use and after long periods of inactivity. For detailed instructions, see **"Driveline Maintenance"** on page 21.

IMPORTANT: Check driveline collapsible and maximum length before completing **"Driveline Hook-Up"**. Structural damage to the equipment can occur if these checks are not made. Refer to **"Check Driveline Collapsible Length"** on page 14.

The driveline (#3) fastens to the tractor power take-off shaft with a pull collar yoke (#4).

1. If driveline collapsible length has not been checked, go to **"Check Driveline Collapsible Length"** on page 14. Otherwise, continue with step 2 below.
2. Park tractor and implement on a level surface.
3. Shut tractor down before dismounting. Refer to **"Tractor Shutdown Procedure"** on page 9.
4. If tractor drawbar interferes with the driveline during hook-up, disconnect driveline and move drawbar forward, to the side, or remove.
5. Pull back on driveline pull collar (#4) and push the driveline yoke onto the tractor's power take-off shaft. Release pull collar and continue to push the driveline yoke forward until the pull collar pops out and locks in place.
6. Pull on both ends of the driveline to make sure it is secured to the tractor and implement.
7. Continue with **"Check Driveline Interference"** on page 15.

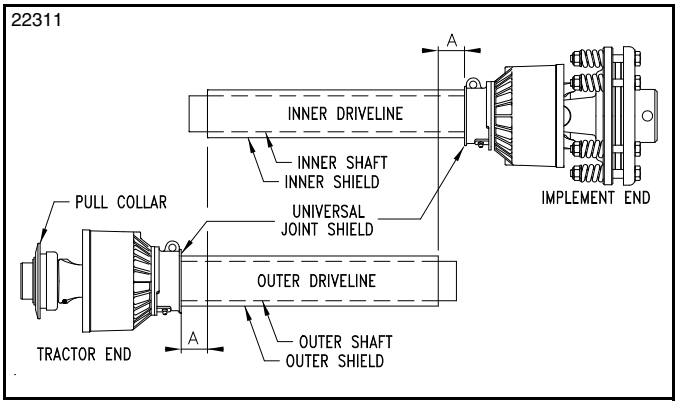

Check Driveline Minimum Length
Figure 1-7

Check Driveline Collapsible Length

IMPORTANT: A driveline that is too long can bottom out causing structural damage to the tractor and implement. Always check driveline minimum length during initial setup, when connecting to a different tractor, and when alternating between using a quick hitch and a standard 3-point hitch. More than one driveline may be required to fit all applications.

IMPORTANT: The power take-off shaft and gearbox input shaft must be aligned and level with each other when checking driveline minimum length. A driveline that is too long can damage tractor and implement.

1. With driveline attached only to the implement, remove outer driveline (tractor end) from inner driveline to separate the two profiles.
2. Park tractor and implement on a level surface.
3. Raise implement until the gearbox input shaft is level and in-line with the tractor's power take-off shaft.
4. Securely block implement at this height with solid, non-concrete supports to keep it from lowering.
5. With implement resting on the support blocks, shut the tractor down using **"Tractor Shutdown Procedure"** on page 9.

Refer to Figure 1-7:

6. Attach outer driveline to the tractor's power take-off shaft. Refer to steps 4-6 on page 13.
7. Hold inner and outer drivelines parallel to each other as shown and measure distance "A".
   - If "A" is less than 1" (2.5 cm), continue with step 8.
   - If "A" is greater than or equal to 1" (2.5 cm), skip to **"Assemble Inner & Outer Driveline Halves"** on this page.

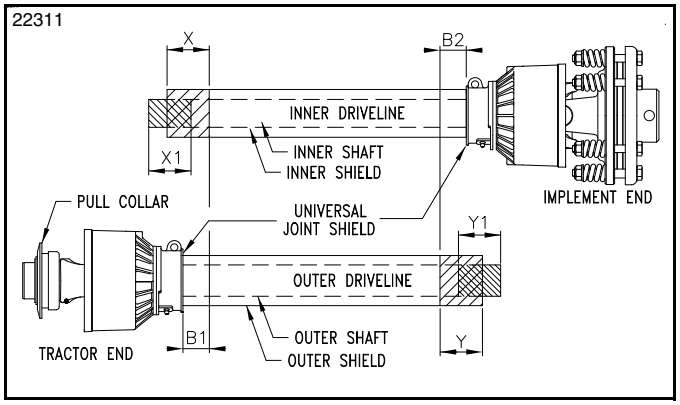

Shorten Driveline Length
Figure 1-8

Refer to Figure 1-8:

8. Shorten driveline as follows:
   a. Measure 1" (2.5 cm) (**"B1"** dimension) back from outer driveline shield and make a mark at this location on the inner driveline shield.
   b. Measure 1" (2.5 cm) (**"B2"** dimension) back from the inner driveline shield and make a mark at this location on the outer driveline shield.
9. Remove outer driveline from the tractor power take-off shaft and inner driveline from the implement's gearbox shaft.
10. Cut off non-yoke end of inner driveline as follows:
    a. Measure from end of inner shield to scribed mark (**"X"** dimension) and record.
    b. Cut off inner shield at the mark. Cut same amount off the inner shaft (**"X1"** dimension).
11. Cut off non-yoke end of outer driveline as follows:
    a. Measure from end of outer shield to scribed mark (**"Y"** dimension) and record.
    b. Cut off outer shield at the mark. Cut same amount off the outer shaft (**"Y1"** dimension).
12. Remove all burrs and cuttings.
13. Continue with **"Assemble Inner & Outer Driveline Halves"** below.

Assemble Inner & Outer Driveline Halves

Refer to Figure 1-9:

1. Apply multi-purpose grease to the inside of the outer shaft and reassemble the driveline halves.
2. If removed, reattach the driveline to the implement. Refer to **"Driveline Installation"** on page 11.
3. Without removing the support blocks, continue with **"Driveline Hook-Up"** on page 13.

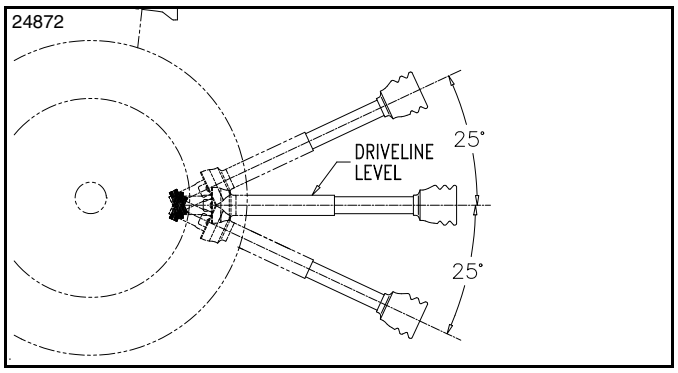

Maximum Driveline Movement During Operation
Figure 1-9

Check Driveline Interference

Refer to Figure 1-9:

WARNING

To avoid serious injury or death:

- *Do not raise center of lower 3-point hitch pins higher than 19" to 21" (48 to 53 cm) above ground with the driveline rotating, and do not engage power take-off if hitch pins are more than 21" (53 cm) above ground. The driveline can break and send flying projectiles.*
- *A rotating driveline must not exceed an angle of 25 degrees up or down, and never engage a driveline while at an angle exceeding 25 degrees up or down. The driveline can break and send flying projectiles.*

1. Start tractor and raise implement slightly off the support blocks used to **"Check Driveline Collapsible Length"** on page 14. Drive forward until the implement is clear of the support blocks.
2. Slowly and carefully raise and lower the implement to ensure drawbar, tires, and other equipment on the tractor do not contact the implement's frame. If there is an interference:
   a. Back implement over the support blocks and lower it onto the blocks.
   b. Shut tractor down before dismounting. Refer to **"Tractor Shutdown Procedure"** on page 9
   c. Move or remove the drawbar if it interferes with the implement and make any other necessary corrections.
   d. Repeat steps 1-2 to verify the implement does not interfere with the tractor.
3. Start tractor, raise implement fully up. Back implement over the support blocks but do not lower implement onto the support blocks.
4. Without changing the 3-point lift height, shut tractor down according to **"Tractor Shutdown Procedure"** on page 9.
5. Check to make sure the driveline does not exceed any of the limits listed below:
   - Center of lower 3-point hitch pins do not exceed 21" (53 cm) above ground level.
   - Driveline angle does not exceed 25° above horizontal.
6. If the driveline exceeds any of the limits listed above:
   a. Adjust tractor 3-point lift limiter to the height that will keep the driveline within the recommended limits.
   b. If the 3-point lift lever does not have a lift height limiter, make a mark with tape or other means to indicate maximum lift height.
7. Start tractor, raise implement slightly, and drive forward enough to clear the support blocks.
8. Lower implement to the ground and shut tractor down according to **"Tractor Shutdown Procedure"** on page 9.

Operating Checklist

Hazard control and accident prevention are dependent upon the awareness, concern, prudence and proper training involved in the operation, transport, maintenance and storage of the Rotary Tiller. It is absolutely essential that no one operates the Rotary Tiller unless they have read, fully understood, and are totally familiar with the Operator's Manual. Make sure the operator has paid particular attention to:

- **Important Safety Information**, page 1
- **Section 1: Assembly & Set-Up,** page 20
- **Section 2: Operating**, page 16
- **Section 3: Adjustments**, page 20
- **Section 4: Maintenance & Lubrication**, page 21

Inspections

Perform the following inspections before using your Rotary tiller with tiller attached to a tractor, power take-off disengaged and completely stopped.

Operating Checklist

✔	Check	Ref.
	Inspect tractor safety equipment to make sure it is in good working condition.	Tractor Manual
	Check all guards and shields to make certain they are in good working condition, in place and secured.	
	Carefully raise and lower implement to ensure drawbar, tires, etc. do not contact tiller frame or driveline.	
	Check driveline. Make sure it is secured at both ends. Refer to "Driveline Installation".	Page 11
	Check drive chain tension. Refer to "Drive Chain Tension Adjustment".	Page 20
	Check tiller depth setting. Refer to "Skid Shoe Adjustment".	Page 20
	Check driveline slip clutch to make sure disks will slip. Refer to "Driveline Maintenance"	Page 21
	Check for worn, bent, broken, loose, and/or missing tines. Refer to "Tine Replacement"	Page 24
	Check oil level in chaincase. Make sure all plugs have been replaced when completed. Refer to "Chaincase" lubrication"	Page 25
	Grease driveline shaft and all other grease fittings Refer to "Lubrication Points".	Page 25
	Check oil level in gearbox. Make sure all plugs have been replaced when completed. Refer to "Gearbox" lubrication.	Page 26
	Check tiller initially and periodically for loose bolts and pins. Refer to "Torque Values Chart".	Page 30

Safety Information

⚠ DANGER

To avoid serious injury or death:

- *Do not engage power take-off while connecting or disconnecting the driveline, or while someone is standing near the driveline. A person's body and/or clothing can become entangled in the driveline.*
- *Keep away from rotating hex drive shaft located between gearbox and drive end of tiller. A person can become entangled in the shaft.*
- *Keep yourself and all others away from rotating tines and drive train. Always disengage power take-off and lockout power source before making adjustments or servicing the tiller. A person's body, hair, or clothing can become entangled in rotating components.*
- *Make all 3-point hydraulic adjustments from the tractor seat. Never make hydraulic adjustments while standing behind the tractor.*
- *All guards and shields must be installed and in good working condition while operating the implement.*
- *Tractor power take-off shaft shield, driveline shields, and gearbox shaft shields must be installed and in good working condition to avoid driveline entanglement and projectiles flying off of the driveline.*
- *Make certain driveline yokes are securely fastened at each end. A loose yoke can work free allowing the driveline to rotate uncontrollably.*
- *Tine impact on objects can throw projectiles resulting in bodily injury or death. Do not point discharge toward people, animals, or buildings and keep people and animals away from tiller during operation.*
- *Keep front rubber dirt deflector on reverse tine tillers in place while operating the unit. Objects in a reverse tine tiller can be thrown forward toward the operator.*
- *Do not use a power take-off adapter. The adapter will increase strain on the tractor's power take-off shaft causing possible damage to shaft and driveline. It will also defeat the purpose of the tractor's power take-off shield.*
- *Never make contact with underground utilities such as electrical power lines, gas lines, phone lines, etc. They can cause serious injury or death from electrocution, explosion, or fire. Always call 811 (USA) or local utility companies before digging so that they can mark the location of underground services in the area. For contact information, see Dig Safe in the "Important Safety Information" starting on page 1.*

WARNING

To avoid serious injury or death:

- *Allow only persons to operate this implement who have fully read and comprehended this manual, and who are properly trained in the safe operation of this implement.*
- *Always follow "Tractor Shutdown Procedure" provided in this manual before dismounting the tractor.*
- *Never carry riders on the implement or tractor. Riders can obstruct the operator's view, interfere with controls, be pinched by moving components, become entangled in rotating components, struck by objects, thrown about, fall off and be run over, etc.*
- *Make certain driveline yokes are securely fastened at each end. A loose yoke can work free allowing the driveline to rotate uncontrollably.*
- *Some tractors are equipped with two power take-off speeds. Be certain your tractor's power take-off shaft is set-up to operate at 540 rpm. Do not exceed 540 rpm power take-off speed. Excessive speed can damage drive/driven components and increase the risk of a thrown object hazard.*
- *Always disengage power take-off immediately after lifting tiller above ground level. Never operate tiller in the raised position. The tiller can discharge objects at high speeds resulting in injury or death.*
- *Check driveline when lowering tiller into the ground to make sure it does not interfere with the tractor drawbar at maximum depth. If needed, shut tractor off and move or remove drawbar to prevent damage to the driveline.*
- *A rotating driveline must not exceed an angle of 25 degrees up or down, and never engage a driveline while at an angle exceeding 25 degrees up or down. The driveline can break and send flying projectiles.*
- *Do not operate a broken or bent driveline. Such a driveline will break apart while rotating at high speeds. Always remove the implement from use until the damaged driveline can be repaired or replaced.*
- *Perform scheduled maintenance. Check for loose hardware, missing parts, broken parts, structural cracks, and excessive wear. Make repairs before putting the implement back into service.*
- *Do not till across steep inclines that are subject to rollover. The action of the tines being forced down into the ground can cause the tractor to roll-over resulting in serious injury or death. Consult your tractor's manual for acceptable inclines the tractor is capable of traveling across.*
- *Be careful when working areas where obstructions can be hidden. Always mark potential hazards with a visible flag. Travel slowly through high risk areas and be prepared to stop immediately should implement make contact with a solid object.*
- *Do not use implement for a purpose other than the work it is designed to do as defined in this manual.*
- *Do not use implement as a man lift, work platform or as a wagon to carry objects. It is not properly designed or guarded for this use.*
- *Do not use implement to lift objects; to pull objects such as fence posts, stumps, etc; or to push objects. The unit is not designed or guarded for these uses.*
- *Do not use implement to tow other equipment unless it is designed with a tow hitch. Doing so can result in loss of control and damage the equipment.*
- *Do not alter implement or replace parts on the implement with other brands. Other brands may not fit properly or meet OEM (Original Equipment Manufacturer) specifications. They can weaken the integrity and impair the safety, function, performance, and life of the implement. Replace parts only with genuine OEM parts.*
- *Avoid exposure to dust containing crystalline silica particles. This dust can cause serious injury to the lungs (silicosis). Because crystalline silica is a basic component of sand and granite, many activities at construction sites produce dust containing crystalline silica. Trenching, sawing, and boring of material containing crystalline silica can produce dust containing crystalline silica.*

IMPORTANT: Make sure all safety labels are in their proper location and in good condition before operation. Follow all directions on the safety labels.

IMPORTANT: To prevent damaging the park stand, always store the stand in its transport position before moving the tiller.

Transporting

WARNING

To avoid serious injury or death:

- *When traveling on public roads, use hazard lights, slow moving vehicle sign, clean reflectors, and other adequate devices to warn operators in other vehicles of your presence. If implement blocks visibility of slow moving vehicle sign, relocate sign so it is visible from the back at all times. Always comply with all federal, state, and local laws.*
- *Always disengage power take-off and wait for the driveline to stop rotating before raising the implement to the transport position.*

1. When raising tiller to transport position, be sure that the driveline does not contact tractor or tiller. Adjust the tractor's 3-Point hitch lift height so that the tiller's driveline is not lifted more than 25 degrees from horizontal to prevent damage to the driveline.
2. Remove park stand from its support tube, turn stand upside down and replace through top of support tube as shown in Figure 1-6 on page 13. Secure stand with wire retaining pin. Make certain wire retainer is caught over end of pin.
3. Be sure to reduce tractor ground speed when turning, and leave enough clearance so the tiller does not contact obstacles such as buildings, trees, or fences.
4. Select a safe ground travel speed when transporting from one area to another. When traveling on roadways, transport in such a way that faster moving vehicles may pass you safely.
5. When traveling over rough or hilly terrain, shift tractor to a lower gear.

Unhook Rotary Tiller

The following steps should be done when preparing to store the tiller or unhitch it from the tractor.

IMPORTANT: It is important to adjust the skid shoes fully down as shown in Figure 2-1 to stabilize the tiller when parked. Always follow **"Skid Shoe Adjustment"** steps on page 20 when repositioning the skid shoes.

Refer to Figure 2-1:

1. Reposition the left-hand skid shoe (#1) by:
   a. Loosen 1/2" -13 nut (#5).
   b. Remove 1/2" nut (#3), 1/2" lock washer (#4), and 1/2"-13 x 1 1/4" GR5 hex head cap screw (#2).
   c. Pivot skid shoe down and replace hex head cap screw (#2) in the top hole as shown. Secure cap screw with nut (#3) and lock washer (#4).
   d. Tighten nuts (#3 & #5) to the correct torque. Refer to *Torque Values Chart* in the **"Appendix"** section on page 30 for the proper torque.
2. Repeat step #1 for the right-hand skid shoe.

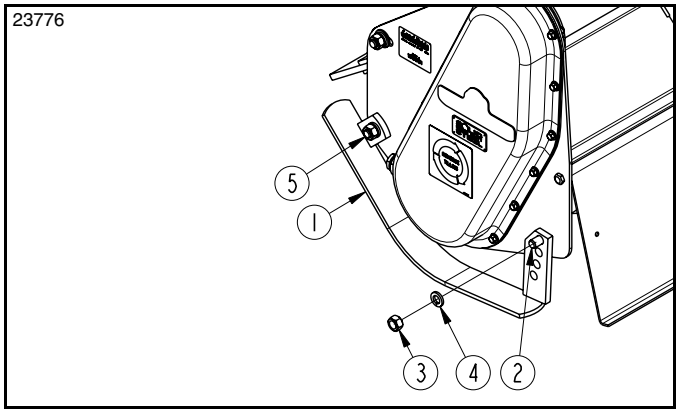

Stabilize Tiller When Parked
Figure 2-1

3. **Refer to Figure 1-1 on page 10:** Remove park stand from the support bracket, turn it up-right, and replace it through the bottom of the support bracket.
4. Secure park stand with wire lock pin.
5. Park tiller on a level, solid surface.
6. Shut tractor down according to **"Tractor Shutdown Procedure"** on page 9.
7. Pull back on the driveline pull collar and hold while pulling the driveline yoke from the tractor's power take-off shaft.
8. Collapse driveline by pushing tractor end of driveline towards the tiller. Store yoke end off the ground to keep it out of the trash and dirt.
9. Remove upper 3-point hitch pin keeper and hitch pin from the tiller's upper center hitch clevis.
10. Remove linchpins and hitch pins from the tiller's lower 3-point clevises.
11. Drive tractor forward several feet and shut tractor down before dismounting. Refer to **"Tractor Shutdown Procedure"** on page 9.
12. Dismount tractor and reinstall hitch pins and hitch pin keepers in the tiller clevises for safe keeping.
13. Collapse driveline by pushing driveline towards the tiller. Store yoke end of driveline off the ground.

WARNING

To avoid serious injury or death:

An unsupported parked tiller can tip over easily. Always use its park stand and when needed, non-concrete support blocks to keep the tiller from tipping onto a person.

14. Check tiller for stability by physically applying pressure at the hitch plates to see if it will tip forward or backward. If the tiller moves in either direction, then block under the tiller as needed to prevent that movement.
15. See **"Long-Term Storage"** on page 24 for additional information on long term storage of your tiller.

General Operating Notes

Before beginning to till the following inspection should be performed:

1. Check oil level in gearbox and chaincase. Refer to **"Lubrication Points"** on page 25.
2. Check that all plugs have been replaced properly in the gearbox and chaincase.
3. Be sure all tiller tines, bolts, and nuts are tight.
4. Be certain all guards, shields, and dirt deflectors are in place and secure.
5. Grease driveline shaft and all other grease fittings. Refer to **"Lubrication Points"** on page 25.
6. Clear area to be tilled of rocks, branches, and other foreign objects.
7. Tall grass and weeds should be mowed before tilling.
8. Tilling should not be done in wet conditions as soil will stick to tines.
9. Make sure the tiller is out of the ground before engaging the power take-off. Engage power take-off at low engine rpm and increase engine power take-off speed to 540 rpm only after the tines are rotating.
10. Tiller tines will cut into the ground better at 540 rpm power take-off speed. Do not exceed the 540 rpm power take-off speed.
11. First, begin tilling in a low gear and shift up to a faster transport speed as ground conditions warrant.
12. Operated tiller with deck level to the ground.
13. Tiller should be operated with the tiller deck level to the ground.
14. Tiller tines will cut better when operating the tractor at full 540 rpm power take-off speed than at reduced throttle.
15. After tilling the first 50 feet, stop and check to see that the tiller is adjusted properly.
16. Do not make turns or attempt to back up while tiller is in the ground. See important note below.

IMPORTANT: Turning or backing up with rotary tines in the ground will damage the tiller.

17. Do not engage power take-off with implement in the fully raised or lowered position.
18. Periodically check for foreign objects wrapped around the rotor shaft and remove them after disengaging power take-off, turning off tractor engine, and removing ignition key.

General Operating Instructions

Before using your Land Pride RTR05 Series Reverse-Tine Rotary Tiller, you should have completely read the Operator's Manual, properly attached the Tiller to the tractor, cut the driveline to proper length, run-in the clutch if your model is equipped with one, and gone through the Operating Checklist. If you have missed any of these steps, please complete them before proceeding.

Now that you have properly prepared yourself and your tiller, it's time to do some tilling. Carefully drive the tractor to the site where you intend to till. You should have already cleaned this site of any large limbs, rocks, trash, metal, or extraneous debris. If you are in tall grass or weeds, we highly recommend you cut or mow before you till.

Line the tractor up just to the right of center on your tillage plot. You will be working from the center out and turning to the left to line up for your next pass. Lower the tiller half way to the ground and reduce your tractor engine speed to idle. Engage the power take-off and gradually increase the engine speed until you reach full power take-off speed of 540 rpm. Lower the tiller to the ground and simultaneously commence forward travel as ground conditions warrant. Do not make turns or attempt to back up while tiller is in the ground. See important note below.

IMPORTANT: Turning or backing up with rotary tines in the ground will damage the tiller.

Travel about 50 ft. and then stop to check your results. When stopping, remember to lift the tiller out of the ground, stop the tractor, reduce engine speed, disengage the power take-off, set the park brake, shut off the tractor, and remove the keys. If you are tilling too shallow or too deep, adjust the skid shoes accordingly. If the soil texture is too coarse, lower the leveling door and reduce your ground speed. If the soil texture is too fine, you will need to raise your leveling door and increase your ground speed. For any other problem conditions that may arise, you will want to refer to the Troubleshooting section on page 29.

When you are done tilling for the day, make sure you use proper tractor shutdown procedures before you get off of the tractor. If you are detaching your tiller, make sure you park it on a dry and level surface leaving it clean and ready for the next use. When you put your tiller up for the season, make sure you refer to the Storage Directions on page 24.

With a little practice and a few adjustments, you will soon be achieving the results you want with your Land Pride 05 Series Reverse Tine Rotary Tiller. See **"Features and Benefits"** on page 28 or **"Product Specifications"** on page 27 for additional information and performance enhancing options.

3-Point Hitch Adjustment

1. Park tractor and tiller on a flat level surface.
2. Slowly raise tiller with hydraulics until the tines are about 1" to 2" (2.5 to 5 cm) above ground.
3. Ensure that the lower arms are blocked to prevent excessive side movement.
4. Place a spirt level on the top cover running from left to right and adjust one of the lower 3-Point arms up or down until the tiller is level from left to right.
5. Rotate the spirt level 90 degrees and adjust the tractor's top center link in or out until the tiller is level from front to back.
6. Slowly operate the tractor's 3-Point hydraulic control up and down to check for clearance between the tires, frame, drawbar etc.

Drive Chain Tension Adjustment

The tension on the drive chain is self adjusting and does not require any maintenance during the life of the chain.

Rear Deflector Adjustment

Refer to Figure 3-1:

The rear deflector (#1) can be adjusted closer to the ground to produce a fine soil texture or can be raised to produce a coarse soil texture. Adjust the chain length by repositioning the chain (#2) in slot "A".

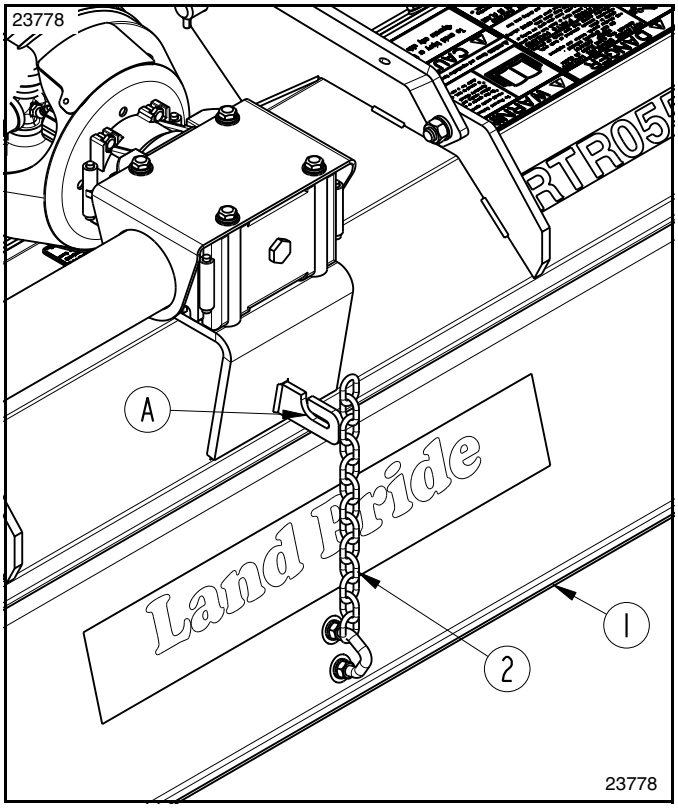

Rear Deflector
Figure 3-1

Skid Shoe Adjustment

Refer to Figure 3-2:

The skid shoes can be adjusted to the desired tilling depth by raising or lowering them as follows:

> **NOTE:** Tilling depth is the vertical distance from bottom of skid shoes to bottom of lowest tine. Be certain both skid shoes are adjusted the same.

1. Raise tiller off the ground. Place a support under the tiller tines (not under the skid shoes) and lower the tiller onto the support. Make certain the tiller is secure when resting on the support before working on or around the tiller.
2. Always place tractor in park, set tractor brakes, shut tractor engine off and remove switch key before dismounting the tractor.
3. Loosen 1/2" -13 nut (#5).
4. Remove 1/2" nut (#3), 1/2" lock washer (#4), and 1/2"-13 x 1 1/4" GR5 hex head cap screw (#2).
5. Pivot skid shoe down or up to the desired height and replace hex head cap screw (#2). Secure cap screw with nut (#3) and lock washer (#4).
6. Tighten nuts (#3 & #5) to the correct torque. Refer to *Torque Values Chart* in the **"Appendix"** section on page 30 for the proper torque.

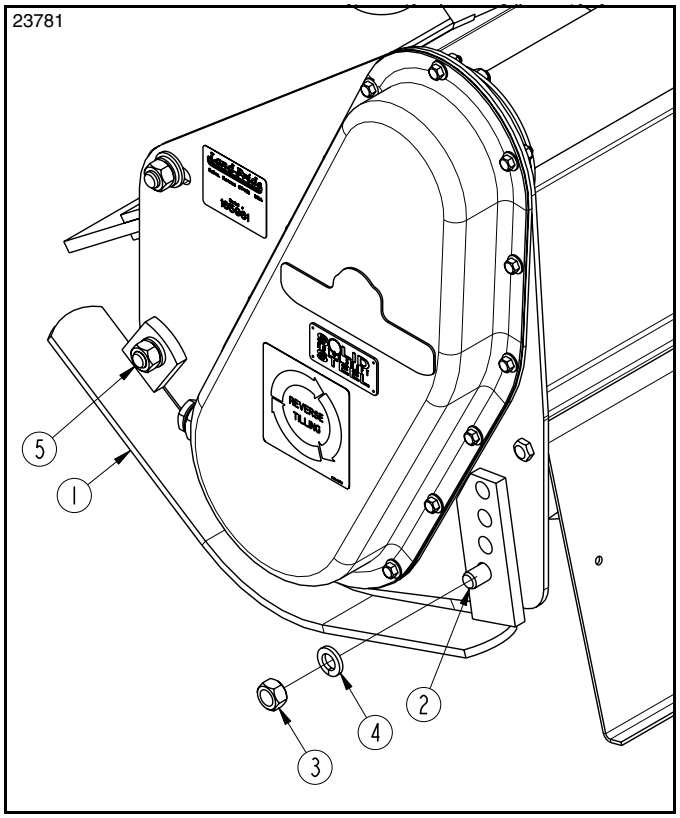

Skid Shoe Adjustment
Figure 3-2

Maintenance

Proper servicing and adjustments are key to the long life of any implement. With careful inspection and routine maintenance, you can avoid costly downtime and repair.

Check all hardware after several hours of operation and regularly thereafter to ensure they are tight and secured. Replace worn, damaged, or illegible safety labels.

DANGER

To avoid serious injury or death:

- *Always disconnect driveline from the tractor before servicing the drivetrain and components powered by the drivetrain. A person can become entangled in the drivetrain if the tractor is started and the power take-off is engaged.*
- *Always secure equipment with solid, non-concrete supports before working under it. Never go under equipment supported by concrete blocks or hydraulics. Concrete can break, hydraulic lines can burst, and/or hydraulic controls can be actuated even when power to the hydraulics is off.*

WARNING

To avoid serious injury or death:

- *Make sure controls are all in the neutral position or park before starting the power machine.*
- *Allow only persons to perform maintenance on this implement who have been properly trained in its safe operation.*
- *Always follow "Tractor Shutdown Procedure" provided in this manual before dismounting the tractor.*
- *An unsupported parked tiller can tip over easily. Always use tiller park stand and when needed, non-concrete support blocks to prevent the tiller from tipping onto a person when disconnected from the tractor.*
- *Perform scheduled maintenance. Check for loose hardware, missing parts, broken parts, structural cracks, and excessive wear. Make repairs before putting the implement back into service.*
- *Do not alter implement or replace parts on the implement with other brands. Other brands may not fit properly or meet OEM (Original Equipment Manufacturer) specifications. They can weaken the integrity and impair the safety, function, performance, and life of the implement. Replace parts only with genuine OEM parts.*

Driveline Maintenance

DANGER

To prevent serious injury or death:

- *Tractor power take-off shaft shield, driveline shields, and gearbox shaft shields must be installed and in good working condition to avoid driveline entanglement and projectiles flying off of the driveline.*
- *Always disconnect driveline from the tractor before servicing the drivetrain and components powered by the drivetrain. A person can become entangled in the drivetrain if the tractor is started and the power take-off is engaged.*

WARNING

To prevent serious injury or death:

- *A slip clutch that has been in use or has slipped for as little as only two or three seconds during run-in may be too hot to touch. Allow a hot clutch to cool before working on it.*
- *Do not operate a broken or bent driveline. Such a driveline will break apart while rotating at high speeds. Always remove the implement from use until the damaged driveline can be repaired or replaced.*

The drive components are protected from shock loads with a shear bolt clutch shown in Figure 4-1 on this page or with a slip clutch shown in Figure 4-2 on page 22.

- For shear bolt instructions, refer to **"Driveline with Shear Bolt Clutch"** on this page.
- For slip clutch instructions, refer to **"Driveline With Slip Clutch"** on page 22.

Remove Driveline

It will be easier if the driveline is removed from the tractor and tiller while replacing a shear bolt or repairing the slip clutch. Follow instructions below when removing the driveline.

NOTE: If servicing the slip clutch, make sure the clutch run-in procedure has been completed before removing the driveline.

1. Shut tractor down according to **"Tractor Shutdown Procedure"** on page 9.
2. At the back of the tractor, pull back on the pull collar and hold while pulling the driveline yoke from the tractor's power take-off shaft.
3. **Refer to Figure 1-1 on page 10:** At the tiller, unsnap access covers (#15) on the tiller's gearbox shield. Keep access covers for reuse.
4. Remove driveline from the tiller as follows:
   - **Push Pin Yoke:**
     Refer to Figure 4-1 on page 22: Push in on the push pin and hold. Pull back on the yoke until the driveline is removed from the tiller.
   - **Bolt-on Yoke:**
     Refer to Figure 4-2 on page 22: Remove nut, lock washer, and bolt from the yoke. Pull back on the yoke until the driveline is removed from the tiller.
5. Continue with **"Driveline with Shear Bolt Clutch"** instructions on page 22or with slip clutch **"Disassemble, Inspect & Reassemble"** instructions on page 23.

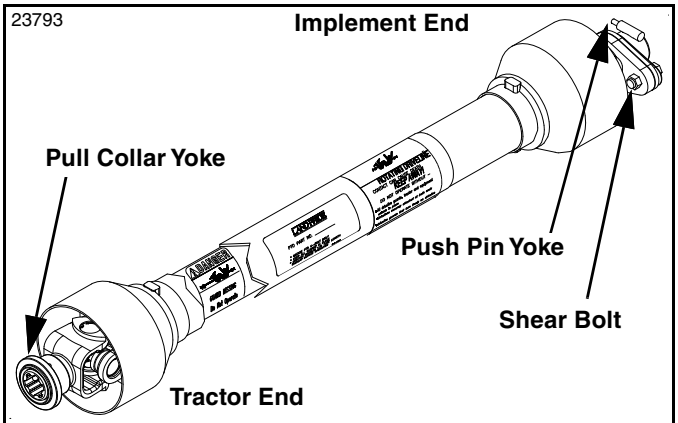

Shear Bolt & Locknut Part Number

Part No.	Part Description
165.000.509	BOLT & LOCKNUT M6X40 CL 8.8 (Torque locknut to 8 ft. lbs (11 Nm)

IMPORTANT: If M6 bolt shears excessively, a 1/4"-20 GR5 bolt and nut may be used. A 1/4" -20 GR8 bolt is not recommended as it may cause damage to profiles, tiller frame, and/or components.

Shear Bolt Clutch With Push Pin Yoke
Figure 4-1

Driveline with Shear Bolt Clutch

Refer to Figure 4-1:

IMPORTANT: Replace shear bolts with genuine OEM shear bolts.

Shock loads can cause shear bolt breakage. Avoid accidental breakage by making sure the tiller is out of the ground before engaging power take-off. Engage power take-off at low engine rpm. Increase engine speed to 540 rpm only after the tines are rotating.

Should the tiller hit a solid object, the shear bolt will break to protect the drivetrain from damage. Replace the shear bolt as follows:

1. Remove driveline from the tractor and tiller. Refer to **"Remove Driveline"** on page 21.
2. Replace shear bolts with genuine Land Pride shear bolts. Install a new shear bolt in the push pin yoke and secure it with a new locknut. Torque locknut to 8 ft. lbs (11 Nm). Exceeding this torque value can prevent the shear bolt from shearing.

IMPORTANT: Always lubricate the gearbox input shaft before reattaching the driveline to the gearbox. Refer to **"Gearbox Input Shaft"** on page 26.

3. Reattach the driveline to the tiller. Refer to **"Driveline Installation"** on page 11.
4. If needed, hook-up driveline to the tractor. Refer to **"Driveline Hook-Up"** on page 13.

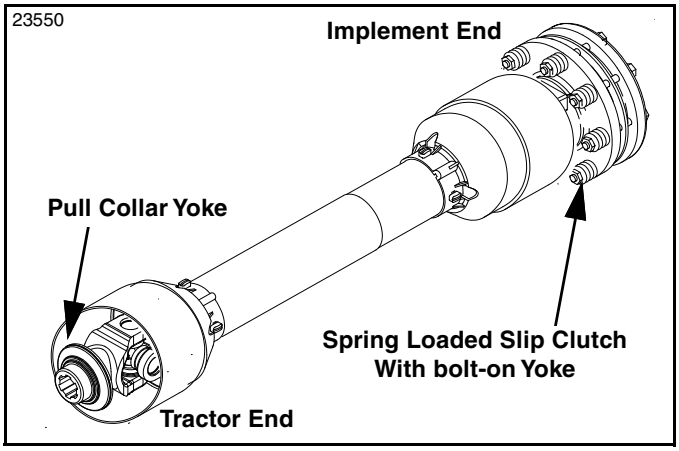

Spring Loaded Slip Clutch With Bolt-on Yoke
Figure 4-2

Driveline With Slip Clutch

Refer to Figure 4-2:

The slip clutch is designed to protect the drivetrain from shock loads. To do this, the clutch must be capable of slippage during operation. To verify the clutch will slip, a **"Clutch Run-in"** operation must be completed.

⚠ WARNING

To avoid serious injury or death:

A slip clutch that has been in use or has slipped for as little as only two or three seconds during run-in may be too hot to touch. Allow a hot clutch to cool before working on it.

IMPORTANT: Prior to initial operation and after 30 days of inactivity, slip friction disks to remove oxidation and moisture. Moisture allows disks to slip easily. Oxidation can prevent disk from slipping causing driveline damage. This damage is NOT covered under the warranty.

Clutch Run-In

Refer to Figure 4-43:

Friction clutches should be "run-in" prior to initial operation and after long periods of inactivity to remove any oxidation that may have accumulated on friction surfaces. To prevent driveline and gearbox damage, repeat "run-in" instructions at beginning of each season and when moisture and/or condensation seizes inner friction plates.

1. Using a pencil or other marker, scribe a line across the exposed edges of the clutch plates and friction discs.
2. Carefully loosen each of the 8 spring retainer nuts by exactly 2 revolutions. It will be necessary to hold hex end of retainer bolt in order to count the exact number of revolutions.
3. Make sure the area is clear of all bystanders and implement is safe to operate.

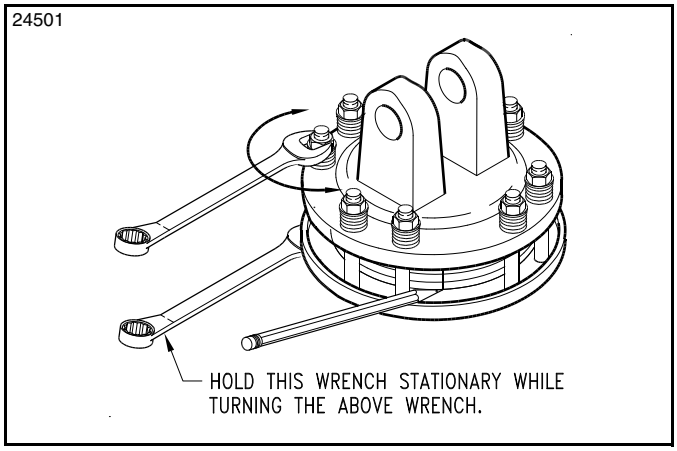

Slip Clutch Run-In
Figure 4-43

4. Start tractor and engage power take-off for 2-3 seconds to permit slippage of the clutch surfaces. Disengage power take-off, then re-engage a second time for 2-3 seconds. Disengage power take-off, shut off tractor, and remove key. Wait for all components to stop before dismounting from tractor.
5. Inspect clutch and ensure that the scribed markings made on the clutch plates have all changed position. Slippage has not occurred if any two marks on the friction disk and plate are still aligned. A clutch that has not slipped must be disassembled to separate the friction disk plates. See **"Disassemble, Inspect & Reassemble"** below.
6. Allow clutch to cool to ambient temperature and tighten each of the 8 spring retainer nuts on the clutch housing exactly 2 revolutions to restore clutch to original setting pressure.
7. Clutch is now ready for use.
8. Check clutch during the first hour of operation and periodically each week. An additional set of scribe marks can be added to check for slippage.

Disassemble, Inspect & Reassemble

If clutch run-in indicated that one or more of the friction disks did not slip, then the clutch must be disassembled to separate parts.

1. Remove driveline from the tractor and tiller. Refer to **"Remove Driveline"** on page 21.
2. Allow clutch to cool to ambient temperature before working on the clutch.

Refer to Figure 4-4 on page 23:

3. Measure and recording each spring length before disassembling the clutch.

Refer to Figure 4-5 on page 23:

4. Remove spring retainer nuts (#9a), springs (#2), and bolts (#9b) from the assembly.
5. Each friction disk (#5) must then be separated from the metal surface adjacent to it.

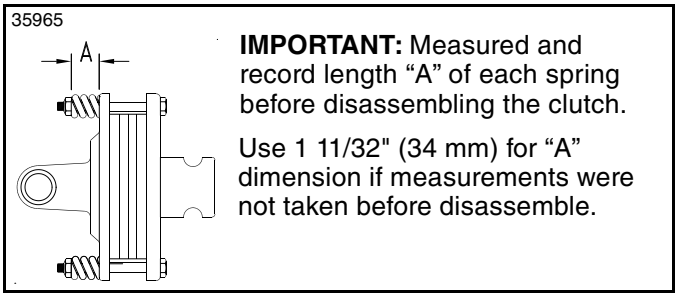

IMPORTANT: Measured and record length "A" of each spring before disassembling the clutch.

Use 1 11/32" (34 mm) for "A" dimension if measurements were not taken before disassemble.

Spring Length
Figure 4-4

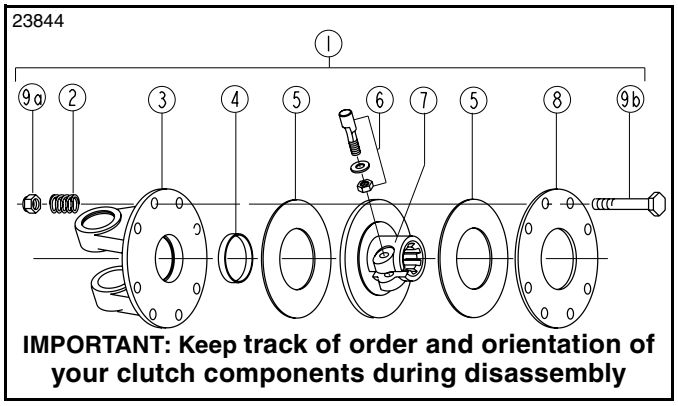

Type A Slip Clutch Assembly
Figure 4-5

6. Inspect all parts for excessive wear and condition. Clean all parts that do not require replacement. The original disk thickness is 1/8" (3.2 mm) and should be replaced if thickness falls below 3/64" (1.1 mm).
7. If the clutch has slipped to the point of "smoking", the friction disks may be damaged and should be replaced. Heat build-up may also affect the yoke joints.
8. Reassemble each friction disk (#5) next to the metal plate it was separated from.
9. Make certain bushing (#4) is replaced in the same location as when it was removed.
10. Install bolts (#9b) through plate (#8) and yoke plate (#3) as shown.
11. Place springs (#2) over the bolts (#9b) and secure with nuts (#9a).

Refer to Figure 4-4:

12. Progressively tighten each spring retainer bolt until the measured compressed spring length "A" in step Step 3 is reached.

IMPORTANT: Always lubricate the gearbox input shaft before reattaching the driveline to the gearbox. Refer to **"Gearbox Input Shaft"** on page 26.

13. Reattach the driveline to the tiller. Refer to **"Driveline Installation"** on page 11.
14. If needed, hook-up driveline to the tractor. Refer to **"Driveline Hook-Up"** on page 13.

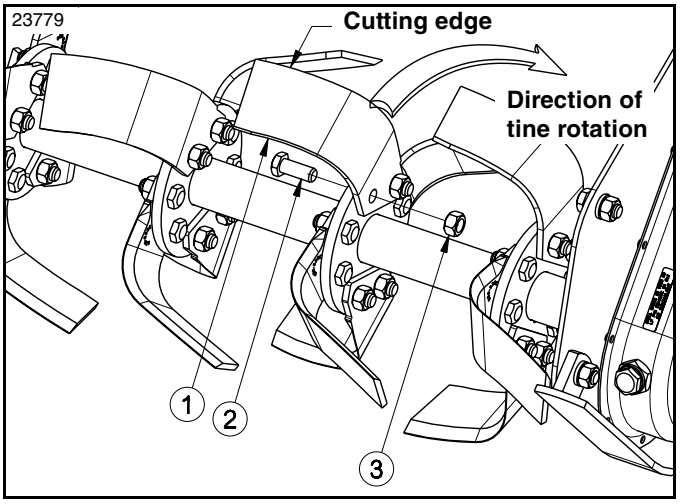

Tine Replacement
Figure 4-6

Tine Replacement

Refer to Figure 4-6:

WARNING

To avoid serious injury or death:

Used tines can be very sharp. Always wear gloves when handling tines to protect against cuts.

IMPORTANT: When ordering tines, be sure to order only genuine OEM tines and to order both right- and left-hand tines. Always install tines with cutting edge facing the direction of rotation.

IMPORTANT: Remove and install one tine at a time to ensure they are oriented correctly when installed.

1. Remove the two locknuts (#3) and two bolts (#2) from tine (#1) to be replaced. Remove the tine.
2. Attach new tine (#1) to the mounting flange making sure its cutting edge crosses over the mounting flange and leads in rotation.
3. Replace the two bolts (#2) and locknuts (#3). Tighten locknuts to proper torque. Refer to the **"Torque Values Chart"** on page 30.

Long-Term Storage

Clean, inspect, service, and make necessary repairs to the implement when storing it for long periods and at the end of the season. This will help to ensure the unit is ready for field use the next time you hook-up to it.

DANGER

To avoid serious injury or death:

Always disconnect driveline from the tractor and secure the implement in the up position with solid, non-concrete supports before servicing the underside. A person can become entangled in the drivetrain if the tractor is started and power take-off is engaged or crushed by an unsupported implement

1. Clean off any dirt and grease that may have accumulated on the Rotary Tiller. Scrape off compacted dirt and then wash surfaces thoroughly with a garden hose.
2. Check the tines for wear and replace if necessary. See *Tine Replacement* earlier in this section.
3. Inspect the tiller for loose, damaged, or worn parts and adjust or replace if needed.
4. Repaint parts where paint is worn or scratched to prevent rust. Ask your dealer for Aerosol Land Pride touch-up paint. They are also available in touch-up bottles with brush, quarts, and gallon sizes by adding TU, QT, or GL to the end of the Aerosol part number.

Land Pride Touch-up Paint

Part No.	Part Description
821-011C	PAINT LP BEIGE SPRAY CAN
821-066C	PAINT ORANGE SPRAY CAN
821-070C	PAINT GP GLOSS BLACK SPRAY CAN

5. Replace all damaged or missing decals.
6. Lubricate as noted in **"Lubrication Points"** on page 25.
7. Drain and refill gearbox and chaincase oil. Be sure to replace all oil plugs.
   - Drain oil in gearbox by removing the bottom drain plug or right-hand cap. See **"Gearbox"** lubrication instructions on page 26.
   - Drain oil in chaincase by removing the bottom plug and tipping tiller backwards. See **"Chaincase"** lubrication instructions on page 25.
8. A coating of oil may be applied to worn surfaces in lieu of painting to minimize oxidation.
9. Store tiller on a level surface in a clean, dry place. Inside storage will reduce maintenance and make for a longer tiller life.
10. Follow all **"Unhook Rotary Tiller"** instructions on page 18 when disconnecting tractor from tiller.

Ordering Replacement Parts

Land Pride offers equipment in factory standard Beige with black highlights. This implement is also available in Orange.

When ordering an optional color, the suffix number corresponding to the color must be added at the end of the part number. Parts ordered without the suffix number will be supplied in factory standard colors.

82 . . . . . Orange **85. . . . . Black**

For example, if you are ordering a replacement part with part number 555-555C and the existing part is orange, then add the suffix 82 to the end of the number to make the part number read 555-555C82.

Lubrication Points

Lubrication Legend

- Multi-purpose spray lube
- Multi-purpose grease lube
- Multi-purpose oil lube
- 50 Hrs — Intervals in hours at which lubrication is required

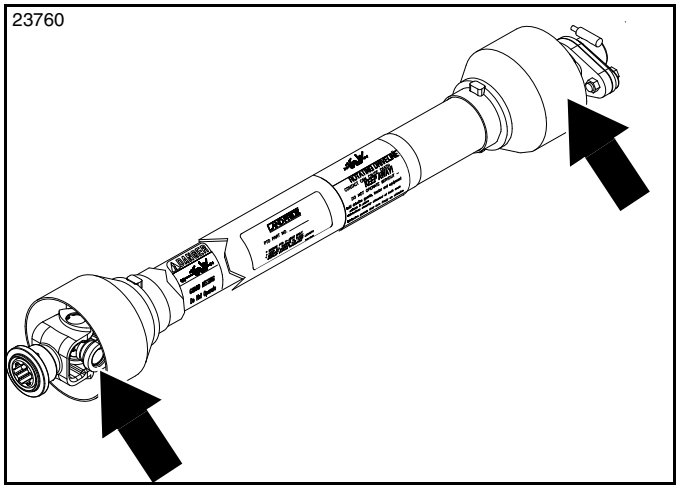

8 Hrs

Driveline U-Joint

Driveline U-joint with grease every 8 hours of operation

Type of grease = Multi-Purpose

Quantity = Coat Generously

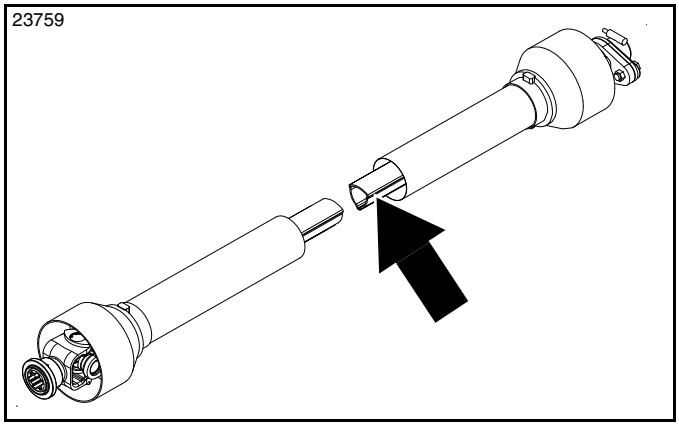

20 Hrs

Driveline Shaft

Disconnect driveline shaft from the tractor and slide apart. Clean and coat the inner tube of the driveline shaft with a light film of grease and then reassemble.

Type of grease = Multi-Purpose

Quantity = Coat Generously

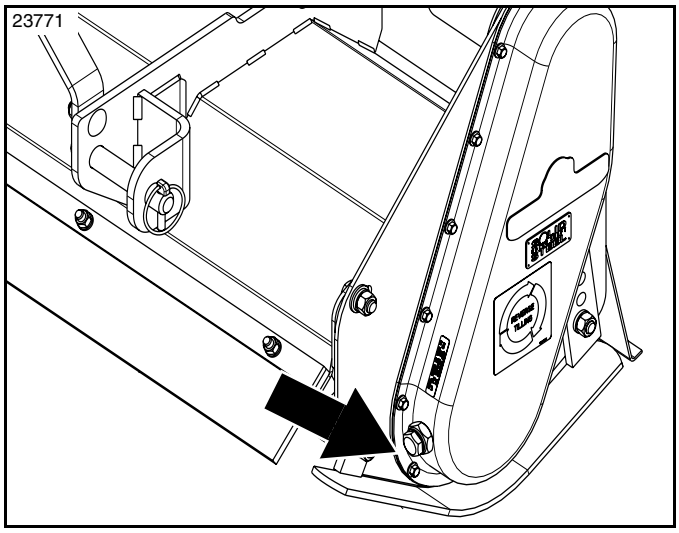

As Required

Chaincase

IMPORTANT: Check lubricant level in the chaincase after the machine has run long enough to heat the lubricant to a fluid state. Level the machine and remove lower level plug. Heated lubricant should reach the bottom of the plug hole. If needed, add recommended lubricant through the level hole or fill hole. Tighten all removed plugs when done.

Type of Lubrication:
Shell Gadus S2 V220 00 flowable grease or equivalent
Land Pride #821-086C, 32oz. (.95 L) bottle

Quantity when empty: 20 oz (0,59L)
Quantity when low: Flowable grease should reach bottom of level plug hole when in the liquid state.

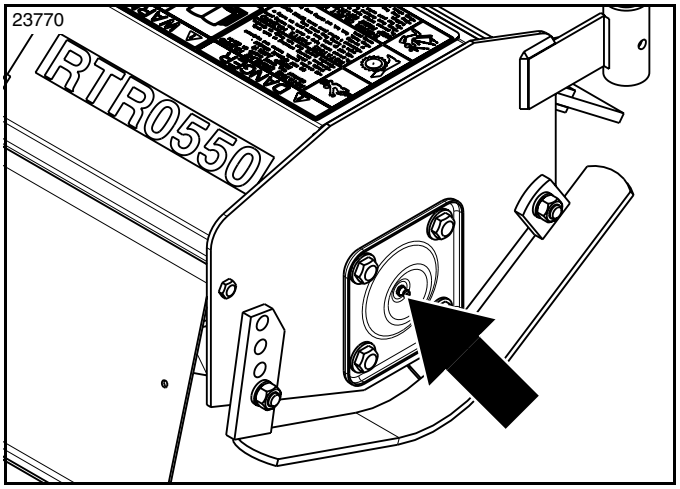

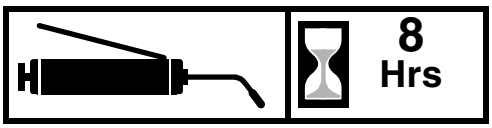

Bearing On Right End Of Rotor Shaft

Type of Lubrication: Multi-Purpose

Quantity = As Required

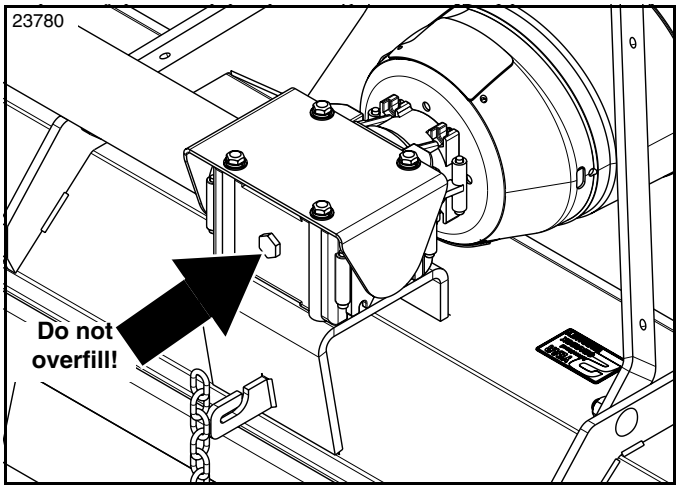

Gearbox

Check oil every 50 hours of operation. Check oil level in gearbox by removing the center plug at the rear of the box. Oil should come to bottom of center plug.

Type of Lubrication: SAE 80-90W EP Oil

Quantity = Refer to **"Gearbox lubrication and oil capacity"** on page 27.

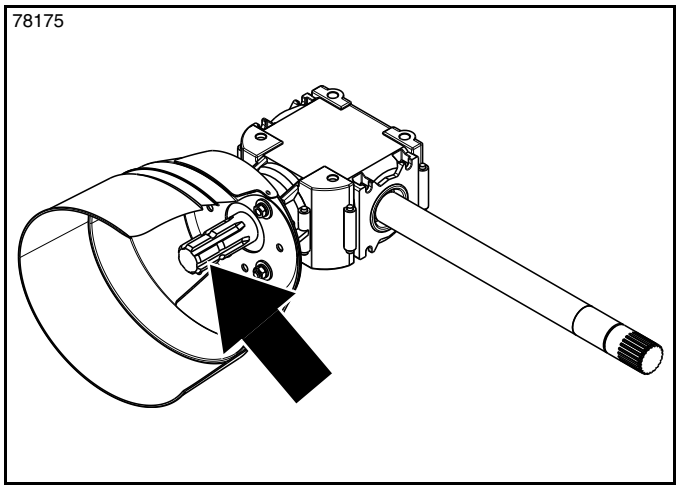

Gearbox Input Shaft

Always lubricate all surfaces of the gearbox input shaft before installing the driveline and before reattaching a removed driveline.

Type of Lubrication: Multi-Purpose

Quantity = Thin Coat

RTR05 Series

Specification & Capacities			
Model Number		**RTR0542**	**RTR0550**
Recommended tractor power take-off horsepower		Up to 26 hp (19.4 kW)(Subcompact Tractors)	
Weight	lbs (kg)	268 (121.6)	298 (135.2)
Tilling width	in (m)	42 (1.07)	50 (1.27)
Overall width		46 1/2 (1.18)	54 1/2 (1.38)
Hitch type		Category I Fits Land Pride's Category I Quick Hitch	
Offset capabilities		No	
Number of flanges		6	7
Number of tines per flange		4	
Tine construction		Alloy steel heat treated "C" shaped blades	
Skid shoes		Adjustable	
Storage stands		Adjustable	
Rear deflector		Adjustable	
Driveline		Category II Off-Center Shear-bolt - standard Slip-Clutch - optional	
Gearbox	hp (kW)	26 hp (19.4 kW) input at 540rpm 1.46:1 ratio Cast iron housing, straight bevel gears	
Gearbox lubrication and oil capacity		1 Pint of SAE 80-90W EP oil	
Drive chain		#80 Roller chain - Fully enclosed in oil bath with drain and fill plugs	
Chaincase Lubrication type **Lubrication capacity**	oz (L)	Shell Gadus S2 V2200 00 flowable grease or equivalent 20 oz (0,56 L)	
Sprockets		Case hardened teeth, splined bores	
Rotor swing diameter	in (cm)	13 (33)	
Rotor shaft speed		230 rpm at 540 rpm power take-off speed	

26794

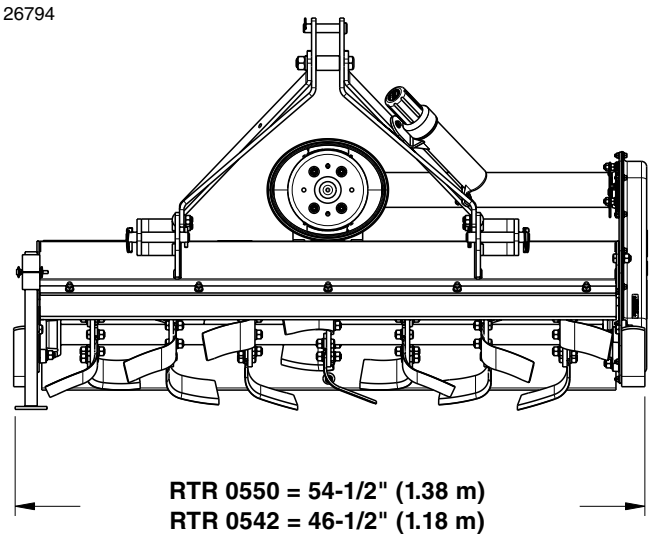

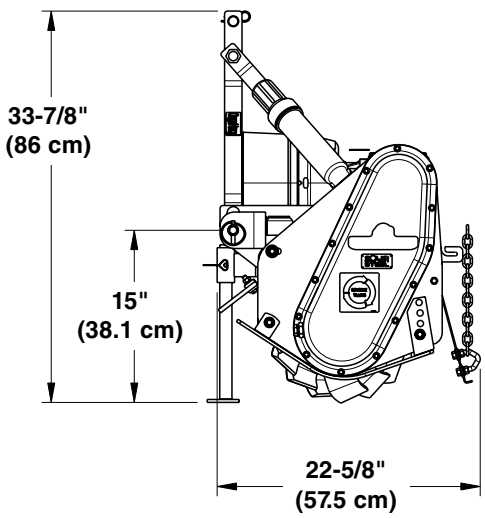

RTR05 Series

Features	Benefits
American made	Many tillers are imported. American made means better parts availability.
Reverse tilling action	Reverse action 'sucks' tiller into ground, does not walk on top of hard ground like forward rotation tillers can.
Tractor horsepower range	17-26 hp (12.7-19.4 kW)
Gearbox warranty	2 Years on housing, seals, and bearings. (Shows our confidence in the product.)
Working widths	42" and 50"(1.07 m and 1.27 m) to meet specific customer needs.
5" (13 cm) Digging depth	For deep soil penetration.
Clevis lower hitch	Provides additional strength and easy one person hook-up.
Fits Land Pride Quick Hitch	Allows for quick and easy one person hook-up. An additional driveline may be required.
Adjustable park stand	Allows for easy hook-up and storage.
Adjustable skid shoes	Control depth with seven adjustments.
Formed rear deflector	Keeps dirt in and leaves a level finish. Forming gives deflector additional strength. Adjustable deflector allows for various finish results.
Front deflector	Front deflector is flexible to take the beating from rocks or debris.
4 "C" shaped heat-treated tines per flange	'C' Shaped tines require less horsepower to move through the ground.
Solid rotor shaft	1 3/4" (4.4 cm) Solid steel rotor shaft for strength.
13" (33 cm) Rotor swing diameter	For deep tilling and turning the soil over faster.
Double lip seal on rotor bearing	Double lip seal helps keep the dirt out and the grease in.
Fully shielded shear pin or slip-clutch driveline	Protects the gearbox and rotor shaft upon hitting obstructions. Slip-clutch saves having to replace shear-pins.
#80 Drive chain enclosed in oil bath	Heavy drive chain stretches less, and oil bath keeps wear to a minimum.
Stamped chain cover	Stamped forming gives the chain cover strength.

Trouble Shooting Chart

Problem	Cause	Solution
Implement makes intermittent clicking noise	Tines are loose. Gearbox has tooth damaged. Roller chain is damaged.	Tighten tines. Replace damaged gearbox. Replace damaged chain link.
Driveline vibrates	Universal joint is worn. Excessive trash is wrapped on rotor. Implement is lifted too high.	Replace universal joint. Remove trash. Lower implement and readjust tractor lift stop.
Gearbox noise is noticeable and constant	May be normal on new implement. Low oil level. Worn gears.	Allow time for break-in. Add oil to the gearbox. Replace gears in the gearbox.
Oil leaking from gearbox	Seals and/or gaskets are damaged. Gearbox is overfilled.	Replace seals or gaskets in the gearbox. Drain oil to proper level.
Rotor will not turn	Power take-off is not engaged. Drive chain is broken. Driveline shear bolt is sheared. Friction clutch is slipping.	Engage power take-off. Repair drive chain. Replace shear bolt. Reduce load to tiller.
Tillage depth insufficient	Tiller is carried by tractor. Tractor has insufficient power. Skid Shoes need adjusting. Tines are worn or bent. Tines are incorrectly installed. Obstacles are entangled in tines and/or rotor. Lower hitch clevises are in the wrong position.	Lower tractor 3-Point arms. Increase tractor rpm. Adjust skid shoes. Replace tines. Check tine placement. Clear rotor and/or tines of obstacles. Relocate lower hitch clevises.
Soil texture too coarse	Leveling door is too high. Power take-off speed is too slow. Ground speed is too fast.	Lower leveling door. Increase power take-off speed. Decrease ground speed.
Soil texture too fine	Leveling door is too low. Ground speed is too slow.	Raise leveling door. Increase Ground Speed.
Implement skips or leaves crop residue	Tines are badly worn. Friction clutch is slipping. Ground speed is too fast for conditions.	Replace worn tines. Reduce load. Reduce ground speed.
Tines operating behind tractor tires show increased wear	Tractor tires can compact soil causing tines that operate in the compacted soil to have increased wear.	Considered as normal wear. Replace worn tines.
Tines balling up with soil	Tines are worn or bent. Tines are incorrectly installed. Rear deflector is too low. Tractor speed is too fast. Soil is too wet.	Replace tines. Install tines correctly. Raise rear deflector. Decrease tractor speed. Wait until soil dries.
Tiller bumping on ground	Obstacles are entangled in tines and/or rotor. Tines are not installed correctly.	Clear rotor and/or tines. Install tines correctly.

Torque Values Chart for Common Bolt Sizes

Bolt Size (inches)	Bolt Head Identification: Grade 2		Grade 5		Grade 8	
in-tpi [1]	N · m [2]	ft-lb [3]	N · m	ft-lb	N · m	ft-lb
1/4" - 20	7.4	5.6	11	8	16	12
1/4" - 28	8.5	6	13	10	18	14
5/16" - 18	15	11	24	17	33	25
5/16" - 24	17	13	26	19	37	27
3/8" - 16	27	20	42	31	59	44
3/8" - 24	31	22	47	35	67	49
7/16" - 14	43	32	67	49	95	70
7/16" - 20	49	36	75	55	105	78
1/2" - 13	66	49	105	76	145	105
1/2" - 20	75	55	115	85	165	120
9/16" - 12	95	70	150	110	210	155
9/16" - 18	105	79	165	120	235	170
5/8" - 11	130	97	205	150	285	210
5/8" - 18	150	110	230	170	325	240
3/4" - 10	235	170	360	265	510	375
3/4" - 16	260	190	405	295	570	420
7/8" - 9	225	165	585	430	820	605
7/8" - 14	250	185	640	475	905	670
1" - 8	340	250	875	645	1230	910
1" - 12	370	275	955	705	1350	995
1-1/8" - 7	480	355	1080	795	1750	1290
1-1/8" - 12	540	395	1210	890	1960	1440
1-1/4" - 7	680	500	1520	1120	2460	1820
1-1/4	750	555	1680	1240	2730	2010
1-3/8" - 6	890	655	1990	1470	3230	2380
1-3/8" - 12	1010	745	2270	1670	3680	2710
1-1/2" - 6	1180	870	2640	1950	4290	3160
1-1/2" - 12	1330	980	2970	2190	4820	3560

Bolt Size (Metric)	Bolt Head Identification: Class 5.8		Class 8.8		Class 10.9	
mm x pitch [4]	N · m	ft-lb	N · m	ft-lb	N · m	ft-lb
M 5 X 0.8	4	3	6	5	9	7
M 6 X 1	7	5	11	8	15	11
M 8 X 1.25	17	12	26	19	36	27
M 8 X 1	18	13	28	21	39	29
M10 X 1.5	33	24	52	39	72	53
M10 X 0.75	39	29	61	45	85	62
M12 X 1.75	58	42	91	67	125	93
M12 X 1.5	60	44	95	70	130	97
M12 X 1	90	66	105	77	145	105
M14 X 2	92	68	145	105	200	150
M14 X 1.5	99	73	155	115	215	160
M16 X 2	145	105	225	165	315	230
M16 X 1.5	155	115	240	180	335	245
M18 X 2.5	195	145	310	230	405	300
M18 X 1.5	220	165	350	260	485	355
M20 X 2.5	280	205	440	325	610	450
M20 X 1.5	310	230	650	480	900	665
M24 X 3	480	355	760	560	1050	780
M24 X 2	525	390	830	610	1150	845
M30 X 3.5	960	705	1510	1120	2100	1550
M30 X 2	1060	785	1680	1240	2320	1710
M36 X 3.5	1730	1270	2650	1950	3660	2700
M36 X 2	1880	1380	2960	2190	4100	3220

[1] in-tpi = nominal thread diameter in inches-threads per inch

[2] N· m = newton-meters

[3] ft-lb= foot pounds

[4] mm x pitch = nominal thread diameter in millimeters x thread pitch

Torque tolerance + 0%, -15% of torquing values. Unless otherwise specified use torque values listed above.
All locknuts or lubricated fasteners: Use 75% of torque value. (i.e. 1/2"-13 GR5 = 76 ft-lb; 75% of 76 or .75 x 76 = 57 ft-lb)

Additional Torque Values

Lower flange bearing on drive end of rotor, 1/2" nuts	45-50 ft-lbs (61-68 Nm)

Warranty

Land Pride warrants to the original purchaser that this Land Pride product will be free from defects in material and workmanship beginning on the date of purchase by the end user according to the following schedule when used as intended and under normal service and conditions for personal use.

Overall Unit and Driveline: One year Parts and Labor

Gearbox: 2 years Parts and Labor

Tines and Driveline Friction Discs: Considered wear items

This Warranty is limited to the repair or replacement of any defective part by Land Pride and the installation by the dealer of any such replacement part, and does not cover common wear items such as blades, belts, tines, etc. Land Pride reserves the right to inspect any equipment or parts which are claimed to have been defective in material or workmanship.

This Warranty does not apply to any part or product which in Land Pride's judgment shall have been misused or damaged by accident or lack of normal maintenance or care, or which has been repaired or altered in a way which adversely affects its performance or reliability, or which has been used for a purpose for which the product is not designed. Misuse also specifically includes failure to properly maintain oil levels, grease points, and driveline shafts.

Claims under this Warranty should be made to the dealer which originally sold the product and all warranty adjustments must be made through an authorized Land Pride dealer. Land Pride reserves the right to make changes in materials or design of the product at any time without notice.

This Warranty shall not be interpreted to render Land Pride liable for damages of any kind, direct, consequential, or contingent to property. Furthermore, Land Pride shall not be liable for damages resulting from any cause beyond its reasonable control. This Warranty does not extend to loss of crops, any expense or loss for labor, supplies, rental machinery or for any other reason.

No other warranty of any kind whatsoever, express or implied, is made with respect to this sale; and all implied warranties of merchantability and fitness for a particular purpose which exceed the obligations set forth in this written warranty are hereby disclaimed and excluded from this sale.

This Warranty is not valid unless registered with Land Pride within 30 days from the date of purchase.

IMPORTANT: The Online Warranty Registration should be completed by the dealer at the time of purchase. This information is necessary to provide you with quality customer service.

Model Number _____ **Serial Number** _____

Corporate Office: P.O. Box 5060
Salina, Kansas 67402-5060 USA
www.landpride.com