Table of Contents

Landscape Rakes

LR3784 & LR3796

39414

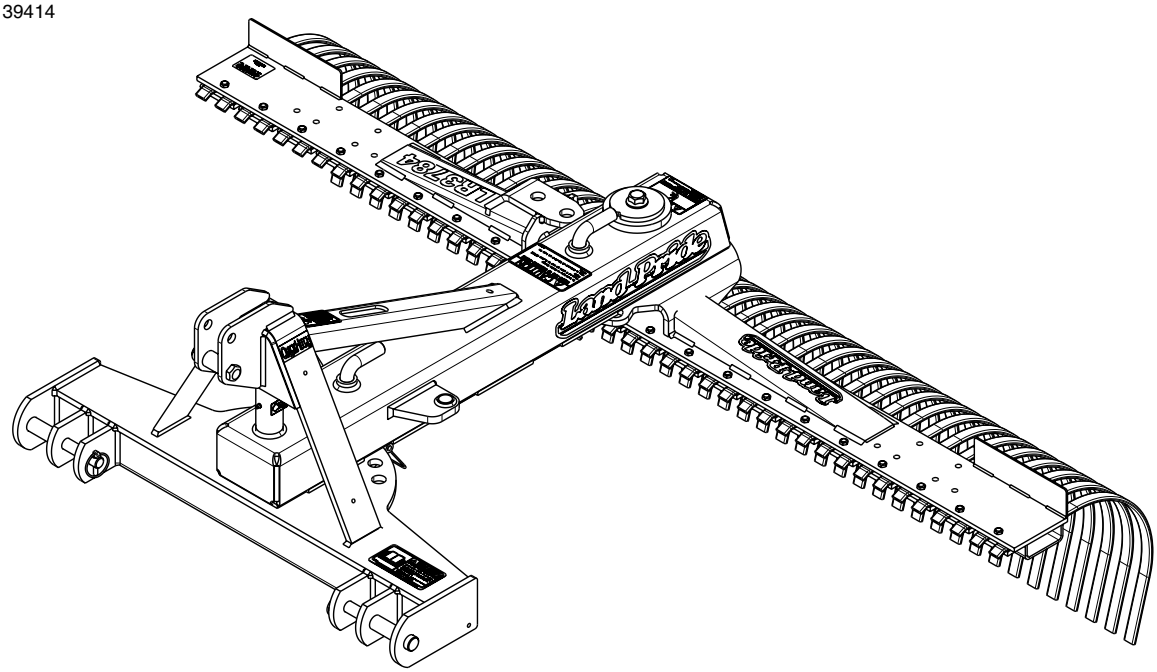

302-337M
Operator's Manual

Read the Operator's Manual entirely. When you see this symbol, the subsequent instructions and warnings are serious - follow without exception. Your life and the lives of others depend on it!

Cover photo may show optional equipment not supplied with standard unit.

For an Operator's Manual and Decal Kit in French Language, please see your Land Pride dealer.

Printed 10/24/22

Machine Identification

Record your machine details in the log below. If you replace this manual, be sure to transfer this information to the new manual.

If you, or the dealer, have added Options not originally ordered with the machine, or removed Options that were originally ordered, the weights and measurements are no longer accurate for your machine. Update the record by adding the machine weight and measurements provided in the Specifications & Capacities Section of this manual with the Option(s) weight and measurements.

Model Number	
Serial Number	
Machine Height	
Machine Length	
Machine Width	
Machine Weight	
Delivery Date	
First Operation	
Accessories	_____ _____ _____

Dealer Contact Information

Name: _____

Street: _____

City/State: _____

Telephone: _____

Email: _____

California Proposition 65

⚠ **WARNING**: Cancer and reproductive harm - www.P65Warnings.ca.gov

Important Safety Information 1
Safety at All Times 1
Look for the Safety Alert Symbol 1
Safety Labels 6
Introduction 8
Application 8
Using This Manual 8
Owner Assistance 8
Serial Number 8
Section 1: Assembly & Set-up 9
Tractor Requirements 9
Torque Requirements 9
Landscape Rake Assembly 9
Tractor Hook-Up 10
Check Clearances 11
Section 2: Accessory Equipment Set-up . . . 12
Dual Gauge Wheel Installation 12
Grader Blade Installation 12
Grader Blade Set-up with Gauge Wheels 12
Grader Blade Set-up without Gauge Wheels . . . 13
Side Plate Assembly to Grader Blade 13
Hydraulic Angling Kit 14
Section 3: Operating Instructions 15
Operating Checklist 15
General Safety 15
Tractor Shutdown Procedure 16
Inspection After Hook-Up 16
Transporting 16
Unhook Landscape Rake 17
General Operating Instructions 17
Section 4: Adjustments 18
Safety Alerts 18
Rake Offset 18
Rake Angling 18
Manual Angling 18
Hydraulic Angling 18
Rake Pitch 19
Gauge Wheels (Accessory) 19
Flip-Down Grader Blade (Accessory) 19
Rotate Grader Blade Up For Storage 19
Rotate Grader Blade Down For Work 19
Section 5: Maintenance & Lubrication 20
Maintenance 20
Long-Term Storage 20
Ordering Replacement Parts 20
Hitch Pivot Shaft 21
Rake Pivot Shaft 21
Rake Teeth 21
Gauge Wheel Yoke Spindle 22
Gauge Wheel Axle 22
Section 6: Accessories 23
Dual Gauge Wheel 23
Grader Blade Mounting Arm 23
Flip-Down Grader Blade With End Plates 23
Rear Blade Attachments 23
Hydraulic Angling 23
Section 7: Specifications & Capacities 24
Section 8: Features & Benefits 25
Section 9: Torque Values Chart 26
Section 10: Warranty 27

Please take our Customer Satisfaction SURVEY at landpride.com

© Copyright 2022 All rights Reserved

Land Pride provides this publication “as is” without warranty of any kind, either expressed or implied. While every precaution has been taken in the preparation of this manual, Land Pride assumes no responsibility for errors or omissions. Neither is any liability assumed for damages resulting from the use of the information contained herein. Land Pride reserves the right to revise and improve its products as it sees fit. This publication describes the state of this product at the time of its publication, and may not reflect the product in the future.

Land Pride is a registered trademark.

All other brands and product names are trademarks or registered trademarks of their respective holders.

Printed in the United States of America.

See previous page for Table of Contents.

Parts Manual QR Locator

The QR (Quick Reference) code on the left will take you to the Parts Manual for this equipment. Download the appropriate App on your smart phone, open the App, point your phone on the QR code and take a picture.

Dealer QR Locator

The QR code on the left will link you to available dealers for Land Pride products. Refer to Parts Manual QR Locator on this page for detailed instructions.

Listed below are common practices that may or may not be applicable to the products described in this manual.

Safety at All Times

Careful operation is your best assurance against an accident.

All operators, no matter how much experience they may have, should carefully read this manual and other related manuals, or have the manuals read to them, before operating the power machine and this implement.

- ▲ Thoroughly read and understand the "Safety Label" section. Read all instructions noted on them.
- ▲ Do not operate the equipment while under the influence of drugs or alcohol as they impair the ability to safely and properly operate the equipment.
- ▲ The operator should be familiar with all functions of the tractor and attached implement, and be able to handle emergencies quickly.
- ▲ Make sure all guards and shields appropriate for the operation are in place and secured before operating the implement.
- ▲ Keep all bystanders away from equipment and work area.
- ▲ Start tractor from the driver's seat with hydraulic controls in neutral.
- ▲ Operate tractor and controls from the driver's seat only.
- ▲ Never dismount from a moving tractor or leave tractor unattended with engine running.
- ▲ Do not allow anyone to stand between the implement and tractor while backing up to the implement.
- ▲ Keep hands, feet, and clothing away from power-driven parts.
- ▲ While transporting and operating equipment, watch out for objects overhead and along side such as fences, trees, buildings, wires, etc.
- ▲ Do not turn tractor so tight as to cause hitched implement to ride up on the tractor's rear wheel.
- ▲ Store implement in a safe and secure area where children normally do not play. When needed, secure implement against falling with support blocks.

Look for the Safety Alert Symbol

The SAFETY ALERT SYMBOL indicates there is a potential hazard to personal safety and extra precaution must be taken. When you see this symbol, be alert and carefully read the message that follows it. Hazard control, and accident prevention are dependent upon the awareness, concern, prudence, and proper training of personnel involved in the operation, transport, maintenance, and storage of equipment.

Be Aware of Signal Words

A signal word designates a degree or level of hazard seriousness. They are:

DANGER: Indicates a hazardous situation that, if not avoided, will result in death or serious injury.

WARNING: Indicates a hazardous situation that, if not avoided, could result in death or serious injury.

CAUTION: Indicates a hazardous situation that, if not avoided, may result in minor or moderate injury.

Be Aware of Special Notices

Special notices are intended to point out important and helpful information that should be followed. They are usually placed inside a box. They are:

IMPORTANT: Indicates that equipment or property damage could result if instructions are not followed.

NOTE: Indicates supplementary explanations that will be helpful when using the equipment.

Safety Precautions for Children

Tragedy can occur if the operator is not alert to the presence of children, Children generally are attracted to implements and their work.

- ▲ Never assume children will remain where you last saw them.
- ▲ Keep children out of the work area and under the watchful eye of a responsible adult.
- ▲ Be alert and shut the implement and tractor down if children enter the work area.
- ▲ Never carry children on the tractor or implement. There is not a safe place for them to ride. They may fall off and be run over or interfere with the control of the power machine.
- ▲ Never allow children to operate the power machine, even under adult supervision.
- ▲ Never allow children to play on the power machine or implement.
- ▲ Use extra caution when backing up. Before the tractor starts to move, look down and behind to make sure the area is clear.

Tractor Shutdown & Storage

- ▲ If engaged, disengage power take-off.
- ▲ Park on solid, level ground and lower implement to ground or onto support blocks.
- ▲ Put tractor in park or set park brake.
- ▲ Turn off engine and remove ignition key to prevent unauthorized starting.
- ▲ Relieve all hydraulic pressure to auxiliary hydraulic lines.
- ▲ Wait for all components to stop before leaving operator's seat.
- ▲ Use steps, grab-handles and anti-slip surfaces when stepping on and off the tractor.

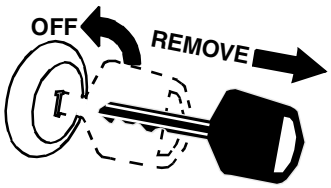

Listed below are common practices that may or may not be applicable to the products described in this manual.

Use A Safety Chain

- ▲ A safety chain will help control drawn machinery should it separate from the tractor drawbar.
- ▲ Use a chain with the strength rating equal to or greater than the gross weight of the towed implement.
- ▲ Attach the chain to the tractor drawbar support or other specified anchor location. Allow only enough slack in the chain to permit turning.
- ▲ Always hitch the implement to the machine towing it. Do not use the safety chain to tow the implement.

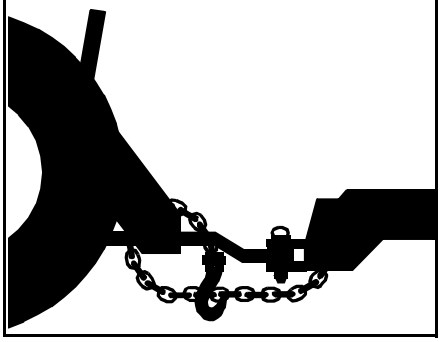

Transport Safely

- ▲ Comply with federal, state, and local laws.
- ▲ Use towing vehicle and trailer of adequate size and capacity. Secure equipment towed on a trailer with tie downs and chains.
- ▲ Sudden braking can cause a towed trailer to swerve unexpectedly. Reduce speed if towed trailer is not equipped with brakes.
- ▲ Avoid contact with any overhead utility lines or electrically charged conductors.
- ▲ Always drive with load on end of loader arms low to the ground.
- ▲ Always drive straight up and down steep inclines with heavy end of skid steer on the “uphill” side.
- ▲ Engage park brake when stopped on an incline.
- ▲ Maximum transport speed for an attached equipment is 20 mph (32 km/h). DO NOT EXCEED. Never travel at a speed which does not allow adequate control of steering and stopping. Some rough terrains require a slower speed.
- ▲ As a guideline, use the following maximum speed weight ratios for attached equipment:

  20 mph (32 km/h) when weight of attached equipment is less than or equal to the weight of machine towing the equipment.

  10 mph (16 km/h) when weight of attached equipment exceeds weight of machine towing equipment but not more than double the weight.
- ▲ **IMPORTANT:** Do not tow a load that is more than double the weight of the vehicle towing the load.

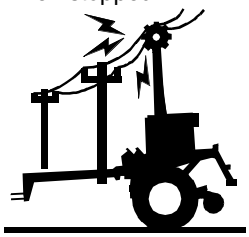

Tire Safety

- ▲ Tire changing can be dangerous and must be performed by trained personnel using the correct tools and equipment.
- ▲ Always properly match the wheel size to the properly sized tire.
- ▲ Always maintain correct tire pressure. Do not inflate tires above recommended pressures shown in the Operator’s Manual.
- ▲ When inflating tires, use a clip-on chuck and extension hose long enough to allow you to stand to one side and NOT in front of or over the tire assembly. Use a safety cage if available.
- ▲ Securely support the implement when changing a wheel.
- ▲ When removing and installing wheels, use wheel handling equipment adequate for the weight involved.
- ▲ Make sure wheel bolts have been tightened to the specified torque.

Practice Safe Maintenance

- ▲ Understand procedure before doing work. Refer to the Operator’s Manual for additional information.
- ▲ Work on a level surface in a clean dry area that is well-lit.
- ▲ Lower implement to the ground and follow all shutdown procedures before leaving the operator’s seat to perform maintenance.
- ▲ Do not work under any hydraulically supported equipment. It can settle, suddenly leak down, or be lowered accidentally. If it is necessary to work under the equipment, securely support it with stands or suitable blocking beforehand.
- ▲ Use properly grounded electrical outlets and tools.
- ▲ Use correct tools and equipment for the job that are in good condition.
- ▲ Allow equipment to cool before working on it.
- ▲ Disconnect battery ground cable (-) before servicing or adjusting electrical systems or before welding on implement.
- ▲ Inspect all parts. Make certain parts are in good condition & installed properly.
- ▲ Replace parts on this implement with genuine Land Pride parts only. Do not alter this implement in a way which will adversely affect its performance.
- ▲ Do not grease or oil implement while it is in operation.
- ▲ Remove buildup of grease, oil, or debris.
- ▲ Always make sure any material and waste products from the repair and maintenance of the implement are properly collected and disposed.
- ▲ Remove all tools and unused parts from equipment before operation.
- ▲ Do not weld or torch on galvanized metal as it will release toxic fumes.

Listed below are common practices that may or may not be applicable to the products described in this manual.

Prepare for Emergencies

- ▲ Be prepared if a fire starts.
- ▲ Keep a first aid kit and fire extinguisher handy.
- ▲ Keep emergency numbers for doctor, ambulance, hospital, and fire department near the phone.

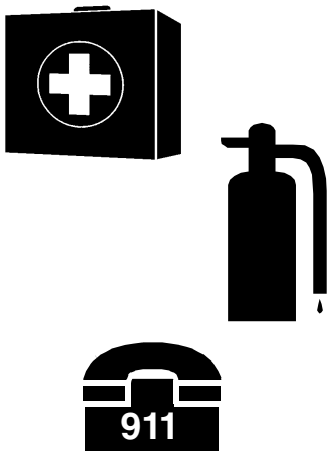

Wear Personal Protective Equipment (PPE)

- ▲ Wear protective clothing and equipment appropriate for the job such as safety shoes, safety, glasses, hard hat, dust mask, and ear plugs.
- ▲ Clothing should fit snug without fringes and pull strings to avoid entanglement with moving parts.
- ▲ Prolonged exposure to loud noise can cause hearing impairment or hearing loss. Wear suitable hearing protection such as earmuffs or earplugs.
- ▲ Operating a machine safely requires the operator's full attention. Avoid wearing headphones while operating equipment.

Avoid High Pressure Fluids

- ▲ Escaping fluid under pressure will penetrate the skin or eyes causing serious injury.
- ▲ Relieve all residual pressure before disconnecting hydraulic lines or performing work on the hydraulic system.
- ▲ Make sure all hydraulic fluid connections are properly tightened/torqued and all hydraulic hoses and lines are in good condition before applying pressure to the system.
- ▲ Use a piece of paper or cardboard, NOT BODY PARTS, to check for suspected leaks.
- ▲ Wear protective gloves and safety glasses or goggles when working with hydraulic systems.
- ▲ **DO NOT DELAY.** If an accident occurs, seek immediate emergency medical care or gangrene may result.

Use Safety Lights and Devices

- ▲ A Slow moving power machine can create a hazard when driven on public roads. They are difficult to see, especially at night. Use the Slow Moving Vehicle (SMV) sign when on public roads.
- ▲ Flashing warning lights and turn signals are recommended whenever driving on public roads.

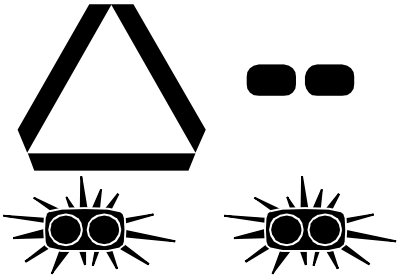

Use Seat Belt and ROPS

- ▲ Land Pride recommends the use of a CAB or roll-over-protective-structures (ROPS) and seat belt in almost all power machines. Combination of a CAB or ROPS and seat belt will reduce the risk of serious injury or death if the power machine should be upset.
- ▲ If ROPS is in the locked-up position, fasten seat belt snugly and securely to help protect against serious injury or death from falling and machine overturn.

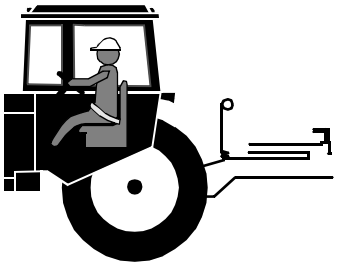

Keep Riders Off Machinery

- ▲ Never carry riders on the tractor or implement.
- ▲ Riders obstruct operator's view and interfere with the control of the power machine.
- ▲ Riders can be struck by objects or thrown from the equipment.
- ▲ Never use the tractor or implement to lift or transport riders.

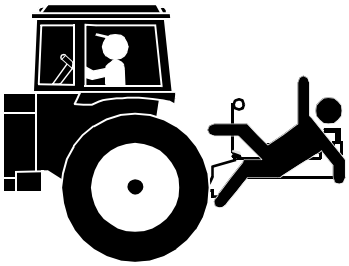

Listed below are common practices that may or may not be applicable to the products described in this manual.

Avoid crystalline Silica (quartz) Dust

Because crystalline silica is a basic component of sand and granite, many activities at construction sites produce dust containing crystalline silica. Trenching, sawing, and boring of material containing crystalline silica can produce dust containing crystalline silica particles. This dust can cause serious injury to the lungs (silicosis).

There are guidelines which should be followed if crystalline silica (quartz) is present in the dust.

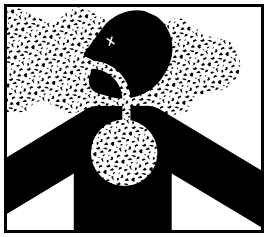

- ▲ Be aware of and follow OSHA (or other local, State, or Federal) guidelines for exposure to airborne crystalline silica.
- ▲ Know the work operations where exposure to crystalline silica may occur.
- ▲ Participate in air monitoring or training programs offered by the employer.
- ▲ Be aware of and use optional equipment controls such as water sprays, local exhaust ventilation, and enclosed cabs with positive pressure air conditioning if the machine has such equipment. Otherwise respirators shall be worn.
- ▲ Where respirators are required, wear a respirator approved for protection against crystalline silica containing dust. Do not alter respirator in any way. Workers who use tight-fitting respirators can not have beards/ mustaches which interfere with the respirator seal to the face.
- ▲ If possible, change into disposable or washable work clothes at the work site; shower and change into clean clothing before leaving the work site.
- ▲ Do not eat, drink, use tobacco products, or apply cosmetics in areas where there is dust containing crystalline silica.
- ▲ Store food, drink, and personal belongings away from the work area.
- ▲ Wash hands and face before eating, drinking, smoking, or applying cosmetics after leaving the exposure area.

Handle Chemicals Properly

- ▲ Protective clothing should be worn.
- ▲ Handle all chemicals with care.
- ▲ Follow instructions on container label.
- ▲ Agricultural chemicals can be dangerous. Improper use can seriously injure persons, animals, plants, soil, and property.
- ▲ Inhaling smoke from any type of chemical fire can be a serious health hazard.
- ▲ Store or dispose of unused chemicals as specified by the chemical manufacturer.

Dig Safe - Avoid Underground Utilities

- ▲ **USA: Call 811**
  CAN: digsafecanada.ca
  Always contact your local utility companies (electrical, telephone, gas, water, sewer, and others) before digging so that they may mark the location of any underground services in the area.
- ▲ Be sure to ask how close you can work to the marks they positioned.

This page left blank intentionally.

Safety Labels

Your Landscape Rake comes equipped with all safety labels in place. They were designed to help you safely operate your implement. Read and follow their directions.

1. *Keep all safety labels clean and legible.*
2. *Refer to this section for proper label placement. Replace all damaged or missing labels. Order new labels from your nearest Land Pride dealer. To find your nearest dealer, visit our dealer locator at www.landpride.com.*
3. *Some new equipment installed during repair requires safety labels to be affixed to the replaced component as specified by Land Pride. When ordering new components make sure the correct safety labels are included in the request.*
4. *Refer to this section for proper label placement.*
   To install new labels:
   a. *Clean surface area where label is to be placed.*
   b. *Spray soapy water onto the cleaned area.*
   c. *Peel backing from label and press label firmly onto the surface.*
   d. *Squeeze out air bubbles with edge of a credit card or with a similar type of straight edge.*

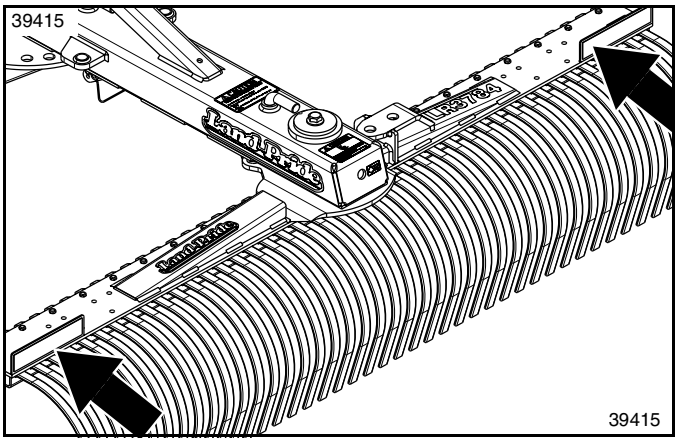

838-614C
Red Reflector: 2" x 9"
2 Places: On right and left back side of rake

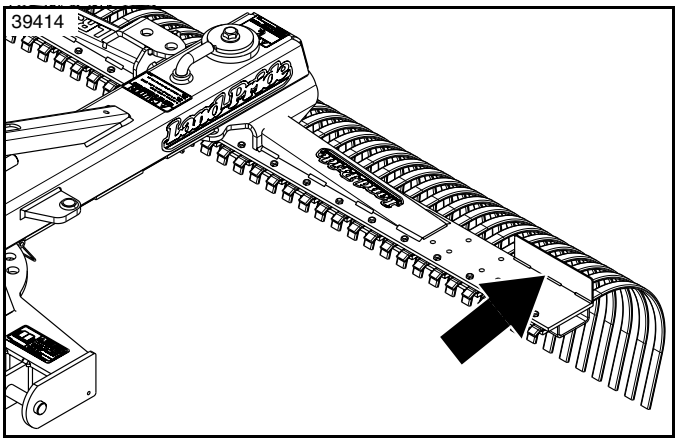

838-603C
Orange Reflector: 2" x 9"
1 Place

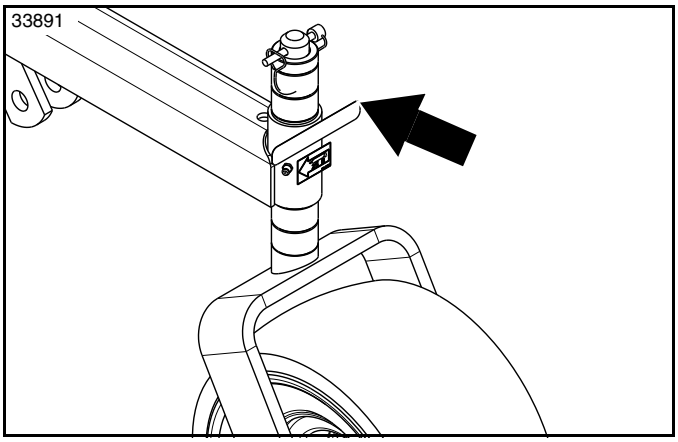

72518

818-335C
Red Reflector: 3/4" x 4 5/16"
2 Places: Right and left hand gauge wheel arms

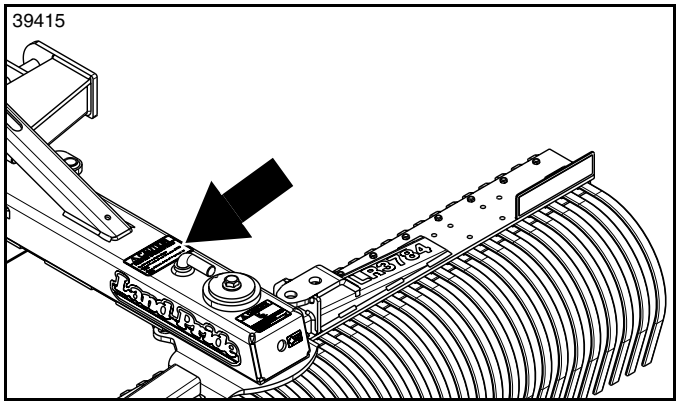

818-202C
Caution: Falling Rake or Moldboard Hazard
1 Place

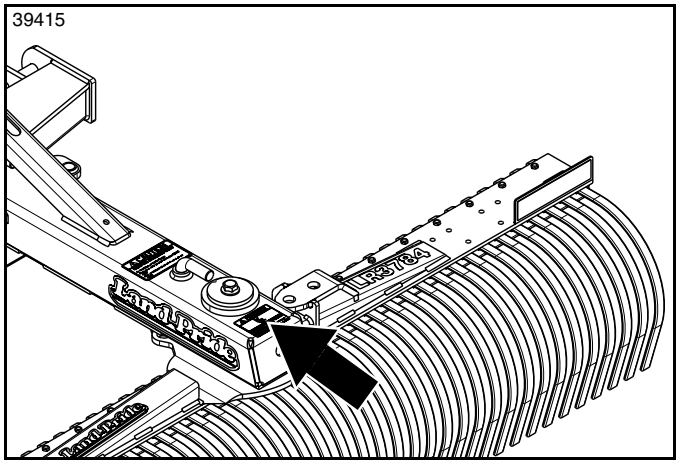

818-487C
Danger: Crushing or Pinching Hazard
1 Place

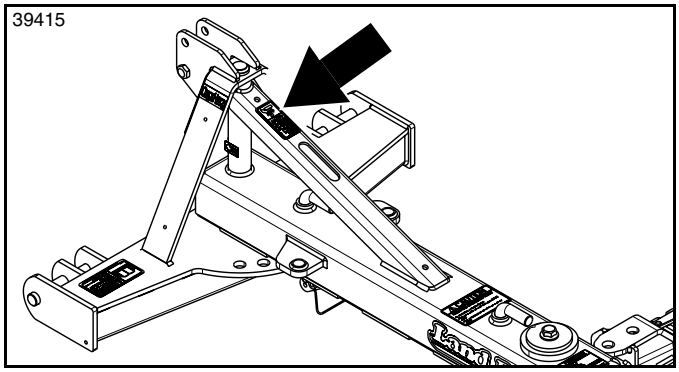

818-798C
Warning: Pinch Point Hazard
1 Place

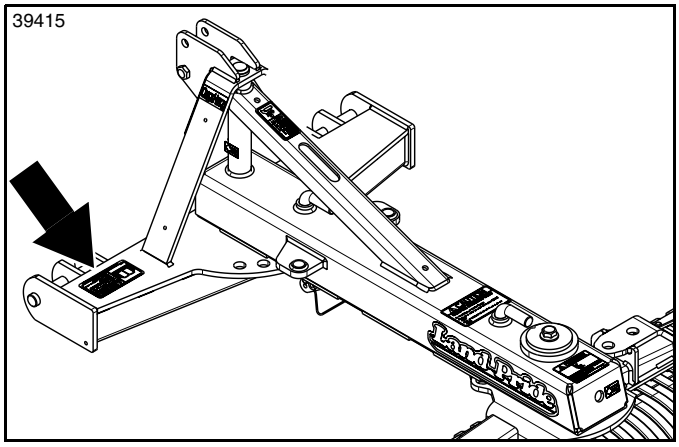

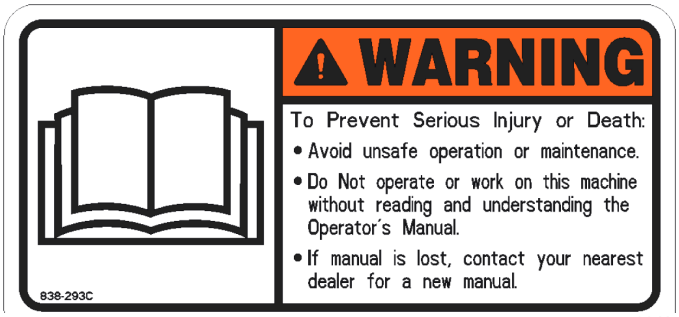

838-293C
Warning: Read Operator's Manual
1 Place

Land Pride welcomes you to the growing family of new product owners. This Landscape Rake has been designed with care and built by skilled workers using quality materials. Proper assembly, maintenance, and safe operating practices will help you get years of satisfactory use from this product.

Application

The LR37 Series Landscape Rakes are designed and built by Land Pride for spreading rock, moving debris, seed preparation, final soil surface preparation, and reshaping soil and/or aggregate profile.

LR37 Series rakes are offered in 7 & 8 ft (2.13 & 2.44 m) widths for mounting to tractors in the 35 to 80 hp (22-60kW) range. They have a Category I & II 3-point hitch and are Quick Hitch compatible. All sizes can be manually offset or angled to meet specific finishing needs (hydraulic angling is optional).

Optional gauge wheel packages are available to enable a more consistent finish over uneven or undulating terrain. An optional flip-down grader with removable end plates is offered to expedite material distribution and contouring.

These Land Pride Landscape Rakes are perfectly suited for landscapers with applications for housing construction, road reconditioning, run-off control projects, and reforestation sites.

See **"Specifications & Capacities"** on page 24 and **"Features & Benefits"** on page 25 for additional information and performance enhancing options.

Using This Manual

- This Operator's Manual is designed to help familiarize you with safety, assembly, operation, adjustments, troubleshooting, and maintenance. Read this manual and follow the recommendations to help ensure safe and efficient operation.
- The information contained within this manual was current at the time of printing. Some parts may change slightly to assure you of the best performance.
- To order a new Operator's or Parts Manual, contact your authorized dealer. Manuals can also be downloaded, free-of-charge, from our website at www.landpride.com

Terminology

"Right" or "Left" as used in this manual is determined by the direction the operator faces while sitting in the operator's seat looking forward unless otherwise stated.

Owner Assistance

The dealer should complete the Online Warranty Registration at the time of purchase. This information is necessary to provide you with quality customer service.

The parts on your Landscape Rake have been specially designed by Land Pride and should only be replaced with genuine Land Pride parts. Contact a Land Pride dealer if customer service or repair parts are required. Your Land Pride dealer has trained personnel, repair parts, and equipment needed to service the implement.

Serial Number

For quick reference and prompt service, record model and serial number on the inside cover page and again on the warranty page. Always provide model number and serial number when ordering parts and in all correspondences with your Land Pride dealer. For location of your serial number plate, see Figure 1.

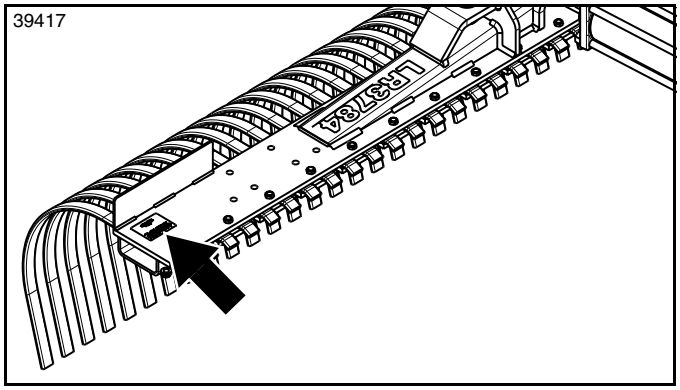

Serial Number Plate Location
Figure 1

Further Assistance

Your dealer wants you to be satisfied with your new Landscape Rake. If for any reason you do not understand any part of this manual or are not satisfied with the service received, the following actions are suggested:

1. Discuss any problems you have with your implement with your dealership service personnel so they can address the problem.
2. If you are still not satisfied, seek out the owner or general manager of the dealership, explain the question/problem, and request assistance.
3. For further assistance write to:

Land Pride Service Department
1525 East North Street
P.O. Box 5060
Salina, Ks. 67402-5060

E-mail address
lpservicedept@landpride.com

Tractor Requirements

WARNING

To avoid serious injury or death:

- *Lightweight tractors with rear attached implements may need weights added to the front to maintain steering control. Consult your tractor Operator's Manual to determine weight requirements and maximum limitations.*
- *Do not use a tractor that is too small or too large. Small tractors can be pushed around and flipped over. Large tractors can damage the attached implement.*

Tractor horsepower and hitch category should be within the range noted below.

Horsepower Rating . . . . . 30-80 hp (22-60 kW)
3-point Hitch Category . . . . . .Cat. I or II

Torque Requirements

See **"Torque Values Chart"** on page 26 to determine correct torque values when tightening hardware.

Landscape Rake Assembly

Refer to Figure 1-1:

DANGER

To avoid serious injury or death:

- *Components falling from the implement can injure a person. Make certain all components are secured to the implement before lifting it, and that the unit is properly supported on the ground before removing lifting device. Always keep feet and other extremities clear of areas where components can fall.*
- *Always check all rake hardware for tightness before moving or working around the unit. Make sure pivot retaining hardware is tighten to the correct torque. The rake can fall from its pivot mount if retaining hardware is loose or missing.*

1. Elevate and Block up the rake frame so that the pivot shaft (#7) sits vertical as shown.
2. Attach parking stand (#4) to mainframe (#3) with 3/8"-16 x 3" GR5 hex flange screw (#9) and hex flange locknut (#10). **Draw locknut up snug, do not tighten**.
3. Rotate parking stand (#4) down and secure with wire snap locking pin (#12). Make certain wire snap is fastened over end of pin to retain pin.
4. Remove hex flange screw (#8), pivot cap (#5), and drive pivot cap (#6) from pivot shaft (#7).

IMPORTANT: Remove paint from rake pivot shaft and wipe grease from inside of mainframe pivot hole to make certain pivot shaft will fit into pivot hole.

5. Clean excess grease and paint from around top of pivot shaft (#7) and inside of pivot hole in main frame.

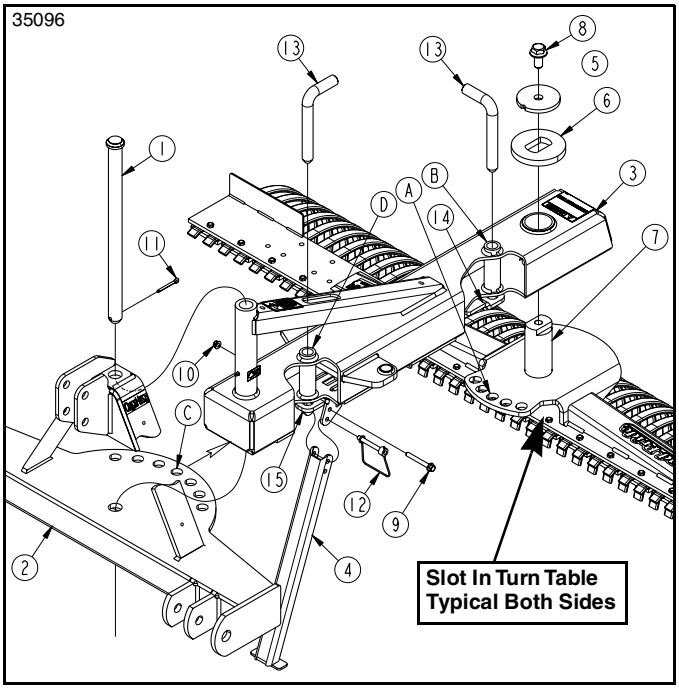

Landscape Rake Assembly
Figure 1-1

6. Rotate mainframe (#3) to the left to align Z-bracket (#14) located beneath mainframe with slot in turn table and lower rear hole in mainframe over pivot shaft (#7).
7. Once mainframe is fully onto pivot shaft, rotate mainframe until hole "A" in turntable is aligned with hole "B" in mainframe. Make sure Z-bracket (#14) under mainframe is positioned under turntable.
8. Attach drive pivot cap (#6) and pivot cap (#5) to pivot shaft (#7) with 3/4"-10 x 1 1/2" GR5 hex flange screw (#8). Tighten screw to the correct torque.
9. Insert 1" bent pin (#13) through holes "B" and "A".
10. Rotate parking stand (#4) down and secure with wire snap locking pin (#12). Make certain wire snap is fastened over end of pin to retain pin.
11. Remove cotter pin (#11) and pivot shaft (#1) from hitch frame (#2).
12. Align pivot holes in hitch frame (#2) with pivot tube in mainframe (#3). Make sure Z-bracket (#15) under mainframe is positioned under hitch turntable.
13. Attach hitch frame (#2) to mainframe (#3) with front pivot shaft (#1). Secure pivot shaft with cotter pin (#11). Bend one or both legs of the cotter pin to keep the cotter pin from falling out.
14. Align hole "C" in hitch turntable with hitch pin hole "D" and insert 1" bent pin (#13).

Tractor Hook-Up

DANGER

To avoid serious injury or death:

- *A crushing hazard exists while Connecting and disconnecting the implement. Keep people and animals away while backing-up to the implement or pulling away from the implement. Do not operate hydraulic controls while a person or animal is directly behind the power machine or near the implement.*
- *Always check all rake hardware for tightness before moving or working around the unit. Make sure pivot retaining hardware is tighten to the correct torque. The rake can fall from its pivot mount if retaining hardware is loose or missing.*

WARNING

To avoid serious injury or death:

Always shut tractor down according to "Tractor Shutdown Procedure" provided in this manual before allowing anyone including the operator to hook up or unhook the implement.

NOTE: Land Pride's Quick Hitch can be attached to the tractor to provide quick and easy 3-point hook-up and detachment. See your nearest Land Pride dealer to purchase a Quick-Hitch.

NOTE: Customer to supply necessary hardware for hooking-up with a Quick Hitch. See your nearest Land Pride dealer for assistance.

Refer to Figure 1-2:

1. Ensure lower 3-point lift arms are stabilized to prevent excessive side movement.
2. Slowly back tractor up to rake while using tractor's 3-point hydraulic control lever to align lower lift arm hitch holes with implement's lower hitch pins.
3. Shut tractor down following **"Tractor Shutdown Procedure"** on page 16 before dismounting tractor.
4. With lower 3-point lift arms aligned and positioned in the inside clevises for Cat. I hitch or outside clevises for Cat. II hitch, insert hitch pins through clevis lugs and hitch pin holes in lower 3-point lift arms. Secure hitch pins with linchpins.
5. Connect tractor's top center link hitch hole to implement's top center hitch mounting holes with 3/4" clevis pin, 1" bushing if Cat. II hitch, and linchpin. (Clevis pin, bushing, and linchpin are customer supplied.)
6. Using tractor lift control lever, lift Landscape Rake up until parking stand is off the ground 1 or 2 inches. Rotate parking stand up to transport position and secure with wire retaining pin. Make sure wire retainer is caught over end of pin.
7. Manually adjust one of the two lower lift arms up or down to level the rake from left to right.
8. Manually adjust length of top center link to level the rake from front to rear.

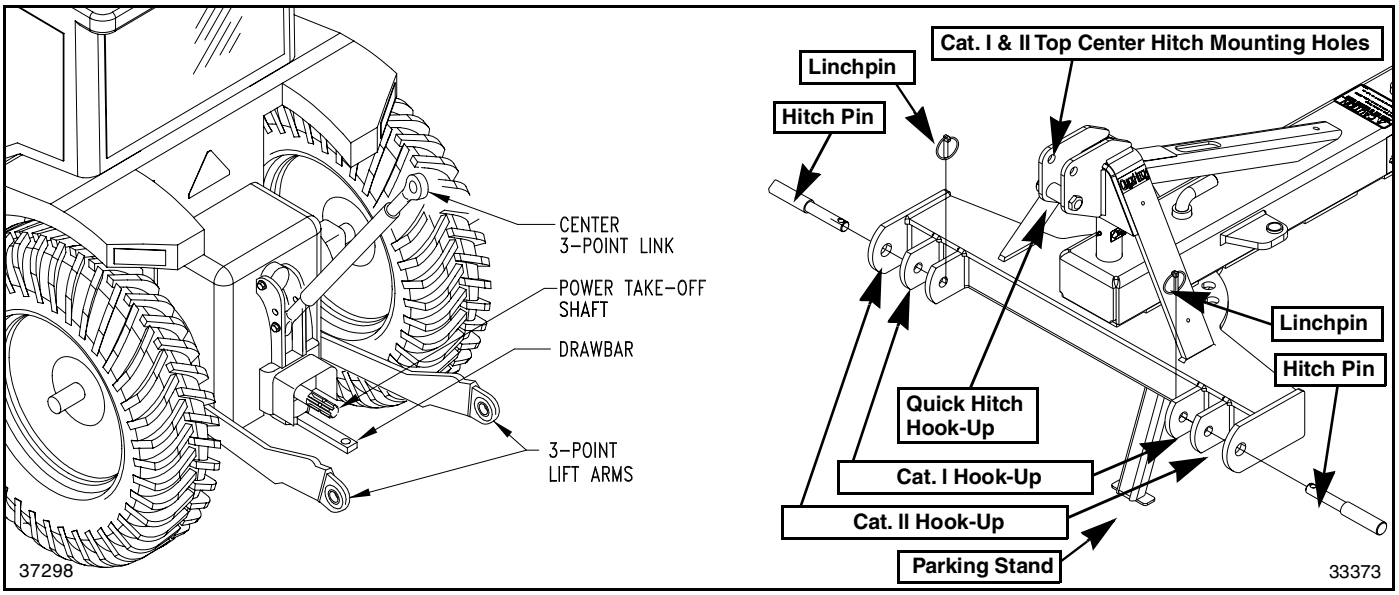

Tractor 3-point Hitch
Figure 1-2

Check Clearances

1. With rake hitched to a tractor, raise rake off the ground and angle rake as far as possible toward the right rear tractor tire. Refer to **"Rake Angling"** on page 18 for angling instructions.
2. Offset rake to align end of rake with the tractor's right rear tire. Refer to **"Rake Offset"** on page 18 for offset instructions.
3. Slowly raise 3-point lift arms fully up and down to make sure rake does not make contact with tractor tire, drawbar, and/or any other equipment on the tractor.
   a. Move or remove drawbar if it interferes with rake.
   b. Set tractor control lever stop to restrict lifting height if rake interferes with tractor tire.
4. Return **"Rake Offset"** and **"Rake Angling"** to center position.
5. Angle and offset rake as far as possible toward the left rear tractor tire and repeat steps 3 through 4 on the left side of the tractor.

Dual Gauge Wheel Installation

Refer to Figure 2-1:

NOTE: The gauge wheel arms are positioned in from the end about 7 1/2" (19 cm).

1. Attach gauge wheel support arm (#2) on the right-hand side of rake mount (#3) with six 3/8"-16 x 2 3/4" GR5 hex head cap screws (#4), interior/exterior toothed lock washers (#6), and hex nuts (#5). Tighten hex nuts to the proper torque.
2. Insert two bushings (#8) into gauge wheel arm (#2) as shown.
3. Insert yoke spindle (#1) through two 1" spacers (#10), inserted bushings (#8), two 1" Spacers (#10), and
   1/2" spacer (#9) as shown. Secure with wire retaining pin (#7). Make certain wire retainer is fastened over end of pin.
4. Repeat steps 1 through 3 to attach gauge wheel assembly on the left-hand side of rake.

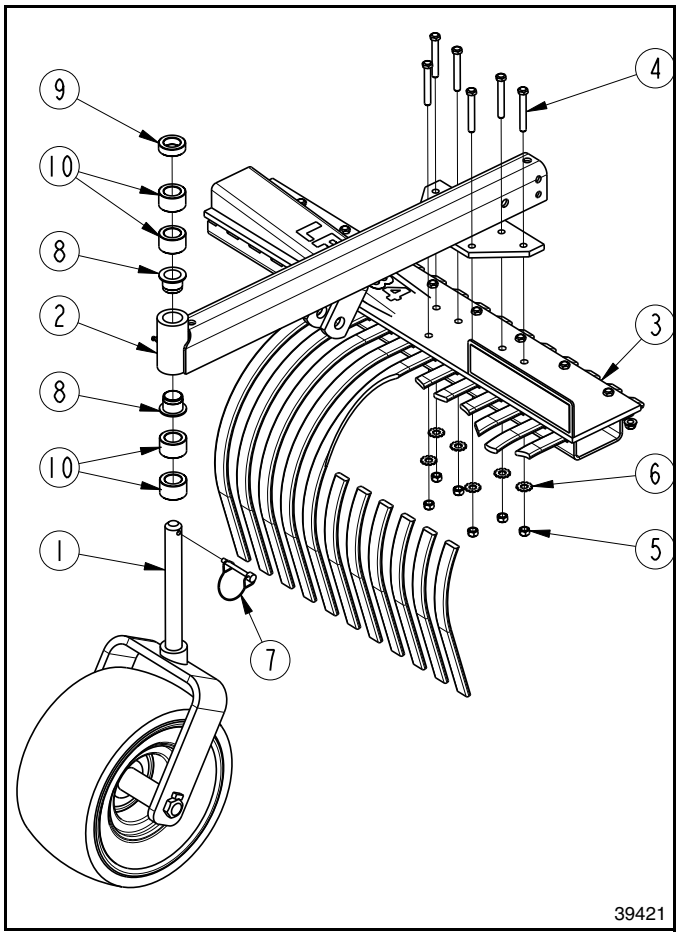

Dual Gauge Wheel Assembly
Right-Hand Assembly Shown
Figure 2-1

Grader Blade Installation

The grader blade can be attached directly to the dual gauge wheel arms. If gauge wheels are not installed on the Landscape Rake, grader blade support arms must be purchased and mounted to the rake before the blade can be installed.

Grader Blade Set-up with Gauge Wheels

Refer to Figure 2-2:

NOTE: See **"Grader Blade Set-up without Gauge Wheels"** on page 13 if Dual Gauge Wheels are not installed.

1. Refer to **"Dual Gauge Wheel Installation"** on this page to assemble Dual Gauge Wheels.
2. Attach blade lock handle (#1) to the right and left-hand Gauge Wheel Arms (#3) with 1/2" x 3" GR5 hex bolts (#4), lock washers (#8), and hex nuts (#6) as shown. Tighten hex nuts to the proper torque.
3. Insert bent pins (#9) through top hole of gauge wheel arms (#3). Secure with hairpin cotters (#10).
4. Attach both right and left sides of grader blade (#2) to gauge wheel arms (#3) with 3/4"-10 x 2 3/4" GR5 hex bolts (#5) and locknuts (#7) as shown. Draw locknuts up snug, do not tighten.
5. Refer to **"Side Plate Assembly to Grader Blade"** on page 13 for attaching side plates to both ends of grader blade.

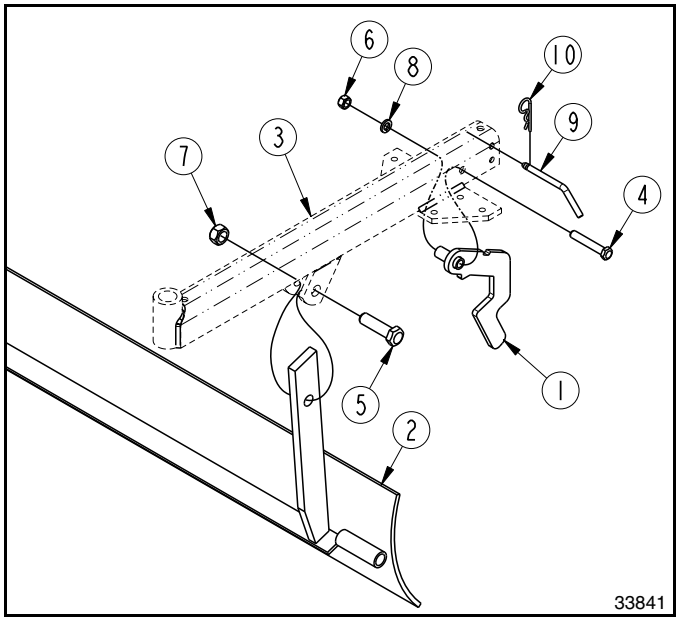

Grader Blade Assembly with Gauge Wheel
Right-Hand Side Shown
Figure 2-2

Grader Blade Set-up without Gauge Wheels

Refer to Figure 2-3:

> **NOTE:** The gauge wheels are set-in from the end about 7 1/2" (19 cm).

1. Attach blade support arm (#3) to the right-hand side of rake mount (#4) with six 3/8" x 2 3/4" GR5 hex head cap screws (#7), interior/exterior toothed lock washers (#12), and hex nuts (#8). Tighten hex nuts to the proper torque.
2. Attach blade lock handle (#1) to the blade support arm with 1/2" x 3" GR5 hex bolt (#5), lock washer (#11), and hex nut (#9) as shown. Tighten hex nuts to the proper torque.
3. Insert bent pin (#13) through top hole in blade support arm (#3). Secure with hairpin cotter (#14).
4. Repeat steps 1-3 to attach blade support arm (#3) to the left-hand side of rake.
5. Attach right and left end of grader blade (#2) to blade support arms (#3) with 3/4" x 2 3/4" GR5 hex head cap screws (#6) and locknuts (#10). Draw locknuts up snug, do not tighten.
6. Refer to **"Side Plate Assembly to Grader Blade"** below for attaching side plates to both ends of grader blade.

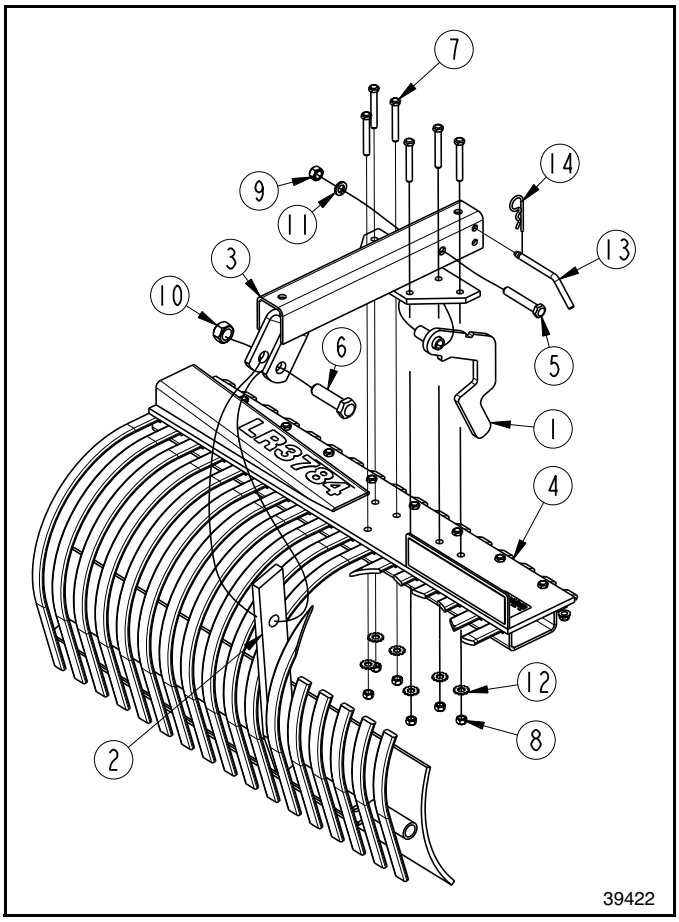

Grader Blade Assembly without Gauge Wheel
Right-Hand Side Shown
Figure 2-3

Side Plate Assembly to Grader Blade

Refer to Figure 2-4:

1. Attach two long hex coupler nuts (#5) and flat washers (#7) to side plate (#1) by inserting 7/16" x 1" GR5 hex cap screws (#4) complete with lock washers (#6), and flat washers (#7) through bottom and top slots of side plate as shown. Draw cap screws up snug, do not torque tight until step 3.
2. Attach right-hand side plate (#1) to the right-hand side of grader blade by inserting pivot pin (#2) through mounting tube (#3). Make certain coupler nuts (#5) are positioned behind the grader blade.
3. Secure pivot pin (#2) with hairpin cotter (#8)
4. Adjust hex coupler nuts (#5) against back side of grader blade and tighten hex cap screws (#4) to proper torque.
5. Repeat steps 1-4 to attach the left-hand side plate (#1) to the left-hand side of the grader blade.

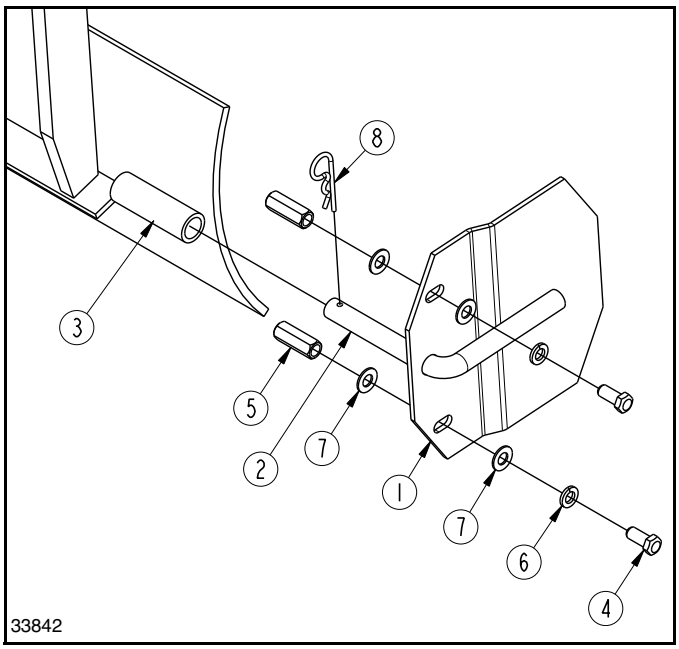

Side Plate Assembly
Right-Hand Side shown
Figure 2-4

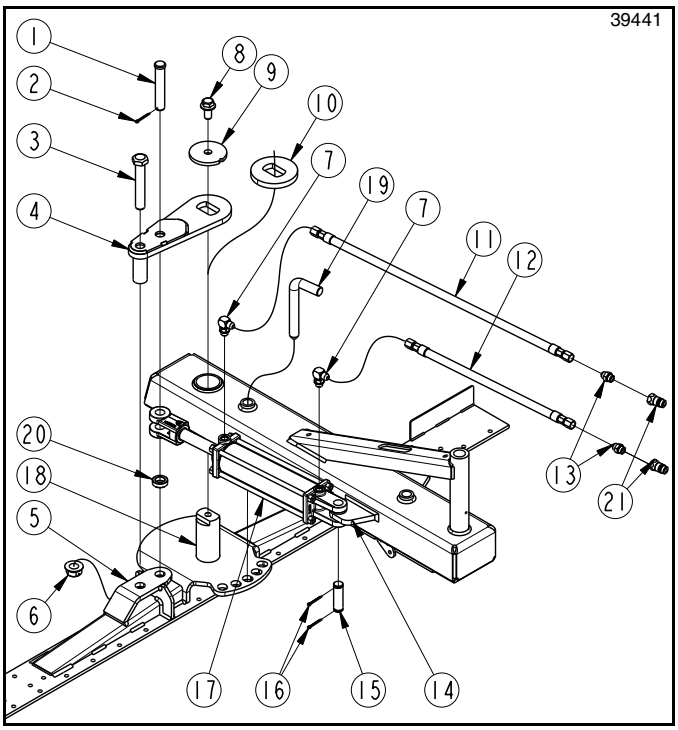

Hydraulic Angling Kit
Figure 2-5

Hydraulic Angling Kit

Refer to Figure 2-5:

The Hydraulic Angling Kit can be easily attached to the Landscape Rake to make adjusting the rake angle easier.

DANGER

To avoid serious injury or death:

Do not remove hardware securing rake pivot cap without supporting underside of the rake. The rake will fall if not supported.

WARNING

To avoid serious injury or death:

Never fully extend or retract hydraulic cylinder(s) without first checking to make sure the implement does not make contact with tractor tires. Extending implement into the tractor tires can result in loss of control and damage to the implement and/or tractor.

1. Support rake by lowering unit to the ground. If unhooked from a tractor, make sure park stand is rotated down and secured.
2. With rake supported to keep it from falling, remove hex flange cap screw (#8), pivot cap (#9), and drive pivot cap (#10). Keep nut and pivot cap for reuse. Store drive pivot cap (#10).
3. Attach hydraulic angling plate (#4) to rake pivot shaft (#18) with pivot cap (#9) and 3/4"-10 x 1 1/2" GR5 hex flange cap screw (#8), 1"-8 x 6" GR5 bolt (#3), and hex flange top locknut (#6). Do not tighten locknut and cap screw at this point.
4. Remove bent pin (#19) and store with hex drive pivot cap (#10).
5. Attach adapter fittings (#13) to one end of hydraulic hoses (#11 & #12) and tighten.
6. Attach quick disconnect couplings (#21) to adapter fittings (#13) and tighten.
7. Position hydraulic cylinder (#17) with ports on top and cylinder base to the front as shown. Screw 90° elbows (#7) into the cylinder ports and tighten facing forward as shown.
8. Attach short hydraulic hose (#12) to elbow (#7) at the cylinder base and tighten.
9. Attach long hydraulic hose (#11) to elbow (#7) at the cylinder rod end and tighten.

IMPORTANT: Attach cylinder base towards the front of the unit as shown. The base will interfere with the main frame if assembled wrong.

10. Attach base end of hydraulic cylinder (#17) to the cylinder mount plate (#14) on the main frame with clevis pin (#15) and cotter pins (#16). Make sure hydraulic ports are positioned on top and cylinder base is positioned to the front as shown.
11. Attach rod end of hydraulic cylinder (#17) to the hydraulic angling plate (#4) with clevis pin (#1) and cotter pin (#2). Place 1/2" spacer (#20) between the rod end of the cylinder and the hydraulic angle lug (#5) as shown.
12. Tighten locknut (#6) and hex flange cap screw (#8) to the correct torque.

Operating Checklist

Hazard control and accident prevention are dependent upon the awareness, concern, prudence, and proper training involved in the operation, transport, storage, and maintenance of the rake. Therefore, it is absolutely essential that no one operates the Landscape Rake unless they have read, fully understood, and are totally familiar with the Operator's Manual. Make sure the operator has paid particular attention to:

- **Important Safety Information**, pages 1 to 3
- **Section 1: Assembly & Set-up,** page 9
- **Section 2: Accessory Equipment Set-up**, page 12
- **Section 3: Operating Instructions**, page 15
- **Section 4: Adjustments**, page 18
- **Section 5: Maintenance & Lubrication**, page 20

Perform the following inspections before using your Landscape Rakes

Operating Checklist

✔	Check	Page
	Check 3-point hook-up procedure. Be sure all pins have been installed and are secured.	10
	All rake adjustments have been made and pins have been installed and are secured.	18
	The operator has read and understands how to operate the rake.	15
	The Landscape Rake has been lubricated as required.	20
	Check rake initially and periodically for loose bolts & pins, See *Torque Values Chart*.	26

General Safety

DANGER

To avoid serious injury or death:

- *Always check all rake hardware for tightness before moving or working around the unit. Make sure pivot retaining hardware is tighten to the correct torque. The rake can fall from its pivot mount if retaining hardware is loose or missing.*
- *Always secure equipment with solid, non-concrete supports before working under it. Never go under equipment supported by concrete blocks or hydraulics. Concrete can break, hydraulic lines can burst, and/or hydraulic controls can be actuated even when power to hydraulics is off.*
- *Always keep a safe distance from obstructions. The implement can extend beyond tractor tires and makes a wide swinging pattern when turning. Never hit solid objects with the implement as this can damage property and cause the tractor to pivot violently resulting in loss of control.*

WARNING

To avoid serious injury or death:

- *Allow only persons to operate this implement who have fully read and comprehended this manual, and who have been properly trained in the safe operation of this implement. Serious injury or death can result from the inability to read, understand, and follow instructions provided in this manual.*
- *Never make contact with underground utilities such as electrical power lines, gas lines, phone lines, etc. They can cause serious injury or death from electrocution, explosion, or fire. Always call 811 (USA) before digging so that they can mark the location of underground services in the area. For contact information, see Dig Safe in the "Important Safety Information" starting on page 1.*
- *Always shut tractor down according to "Tractor Shutdown Procedure" provided in this manual before allowing anyone including the operator to hook up or unhook the implement.*
- *Never carry riders on the implement or tractor. Riders can obstruct the operator's view, interfere with controls, be pinched by moving components, become entangled in rotating components, struck by objects, thrown about, fall off and be run over, etc.*
- *Operate only power machines equipped with a certified Roll-Over Protective Structure (ROPS) and seat belt. Keep folding ROPS in the "locked up" position when appropriate. If ROPS is in the locked up position, fasten seat belt snugly and securely to help protect against serious injury or death from falling and machine overturn.*
- *Do not use implement to lift objects; to pull objects such as fence posts, stumps, etc; or to push objects. The unit is not designed or guarded for these uses.*
- *Do not use implement to tow other equipment. Doing so can result in loss of control and damage the equipment.*
- *Do not use implement as a man lift, work platform or as a wagon to carry objects. It is not properly designed or guarded for this use.*
- *Make sure hydraulic hoses are properly routed without twists to prevent becoming stretched, pinched, or kinked. A damaged hydraulic hose can burst and leak hydraulic fluid.*
- *When using the park stand, make sure it is fully down with wire retaining pin fully inserted and wire retainer over end of pin. If not, the implement could fall.*
- *Never fully extend or retract hydraulic cylinder(s) without first checking to make sure the implement does not make contact with tractor tires. Extending implement into the tractor tires can result in loss of control and damage to the implement and/or tractor.*
- *Avoid catching hydraulic hoses on brush, posts, tree limbs, and other protrusions that could damage and/or break them.*
- *Do not hitch implement to a tractor rated outside the recommended horsepower range. Doing so can bend and/or break the implement.*

- *Hydraulic fluid under high pressure will penetrate the skin or eyes causing a serious injury. Wear protective gloves and safety glasses or goggles when working with hydraulic systems. Use a piece of cardboard or wood rather than hands when searching for leaks. If an accident occurs, seek immediate emergency medical care or gangrene may result. DO NOT DELAY.*
- *Never operate hydraulic cylinder(s) with blade in the ground or under load. Improper use can result in loss of control and damage the Rear Blade. Always lift blade up before operating hydraulic cylinder(s).*
- *Be careful when working areas where obstructions can be hidden. Always mark potential hazards with a visible flag. Travel slowly through high risk areas and be prepared to stop immediately should implement make contact with a solid object.*
- *Avoid exposure to dust containing crystalline silica particles. This dust can cause serious injury to the lungs (silicosis). Because crystalline silica is a basic component of sand and granite, many activities at construction sites produce dust containing crystalline silica. Trenching, sawing, and boring of material containing crystalline silica can produce dust containing crystalline silica.*

IMPORTANT: Do not hitch implement to a tractor rated outside the recommended horsepower range. Doing so can bend and/or break the implement.

IMPORTANT: Be careful when working areas where obstructions can be hidden. Always mark potential hazards with a visible flag. Travel slowly through high risk areas and be prepared to stop immediately should implement make contact with a solid object.

Tractor Shutdown Procedure

The following are basic tractor shutdown procedures. Follow these procedures and any additional shutdown procedures provided in your tractor Operator's Manual before leaving the operator's seat.

1. Reduce engine speed and disengage power take-off if engaged.
2. Park tractor and implement on level, solid ground.
3. Lower implement to ground or onto non-concrete support blocks.
4. Put tractor in park or set park brake, turn off engine, and remove ignition key to prevent unauthorized starting.
5. If included, relieve all hydraulic pressure to auxiliary hydraulic lines.
6. Wait for all components to come to a complete stop before leaving the operator's seat.
7. Use steps, grab-handles and anti-slip surfaces when stepping on and off the tractor.

Inspection After Hook-Up

Make the following inspections after attaching the Landscape Rake to the tractor:

1. Inspect tractor safety equipment to make sure it is in good working condition.
2. Make sure all rake components are properly lubricated. See **"Lubrication Points"** on page 21.
3. Inspect hydraulic hoses for wear, damage, and hydraulic leaks. See **"Avoid High Pressure Fluids Hazard"** on page 3. Replace damaged and/or worn hoses with genuine Land Pride parts.
4. Check clearances between rake and tractor throughout the range of all rake motions. See **"Check Clearances"** on page 11 for detailed instructions.

Transporting

DANGER

To avoid serious injury or death:

Always keep a safe distance from obstructions. The implement can extend beyond tractor tires and makes a wide swinging pattern when turning. Never hit solid objects with the implement as this can damage property and cause the tractor to pivot violently resulting in loss of control.

WARNING

To avoid serious injury or death:

- *When traveling on public roadways, travel in such a way that faster moving vehicles may pass safely. Use accessory lights, clean reflectors, and a slow moving vehicle sign that is visible from the back to warn operators in other vehicles of your presence. Always comply with all federal, state, and local laws.*
- *Select a safe ground speed that will allow adequate control of steering and stopping. Never exceed 20 mph (32 km/h) with attached equipment. Rough terrain requires a slower speed.*
- *Transport with implement centered behind the tractor. An implement offset to one side can extend beyond the tractor tire which creates a a higher risk of hitting traffic and other obstructions.*
- *Make sure implement does not block tractor's Slow Moving Vehicle (SMV) sign when transporting on a public road. If operators in vehicles approaching from the back cannot easily see the sign, then install one on the implement that is visible to warn of your presence.*

1. Do not operate tractor with weak brakes or worn tires.
2. Select a safe ground speed when transporting from one area to another.
3. Be sure to reduce ground speed when turning and leave enough clearance so that the rake does not contact obstacles such as buildings, trees, or fences.

4. When traveling on roadways, transport in such a way that faster moving vehicles may pass safely. A slow moving vehicle sign should be properly displayed when traveling on public roads or right-of-ways.
5. Slow down if traveling on a wet slick road. Shift to a lower gear when traveling over rough or hilly terrain and when going downhill.

Unhook Landscape Rake

WARNING

To avoid serious injury or death:

When using the park stand, make sure it is fully down with wire retaining pin fully inserted and wire retainer over end of pin. If not, the implement could fall.

Unhook Landscape Rake from tractor as follows:

1. Park on a level, hard surface. Lower the so that the rake is just barely off of the ground. Without changing the rake height, shut the tractor down following **"Tractor Shutdown Procedure"** on page 16.
2. Rotate parking stand down and secure with wire retaining pin. Make sure wire retainer is hooked over end of pin.
3. Restart tractor and lower rake and parking stand onto level ground or onto blocks supporting the unit just above ground.
4. Shut tractor down following **"Tractor Shutdown Procedure"** on page 16 before dismounting tractor.
5. Unhook couplings from tractor duplex outlet. Store couplings on the rake frame to keep couplings up out of the dirt.
6. If needed, adjust length of upper center 3-point link until hitch pin can be removed from hitch frame.
7. Remove linchpins from lower hitch pins and pull hitch pins out.
8. Move lower 3-point arms out of the way and reinstall hitch pins, linchpins, and hairpin cotters in the rake hitch for storage.
9. Refer to **"Long-Term Storage"** on page 20 when parking the rake for long periods and when parking it at the end of a working season.

General Operating Instructions

By now you should have thoroughly read your Operator's Manual and properly installed your Land Pride rake to your tractor. Before you begin raking, you should visually survey the work site to make sure it is safe and free of foreign objects. Also, make certain that all irrigation heads, utility outlets, and other obstacles are properly marked.

Please stop and do the above checks and preparations if you have not yet done so before you begin to rake. This is a must for your safety and for the safety of others.

Now that you are properly briefed, your Landscape Rake is properly installed, and you have properly checked out your work site, it is time to begin raking. When transporting or traveling to and from work sites, make sure that the rake is in the fully raised position and not in contact with the ground. Select a safe speed and transport to your work site in such a manner that faster moving vehicles can pass you safely. A slow moving vehicle sign should be employed if you are using a public road or right-of-way.

Once you have safely arrived at your work site, lower your rake with the 3-point hitch control lever so that the rake is just barely off of the ground. Without changing the 3-point control lever, shut the tractor down following **"Tractor Shutdown Procedure"** on page 16.

Make the necessary offset, angle, pitch, and gauge wheel adjustments to the rake to achieve the desired results.

- Offsetting the rake will allow the unit to work closer to objects on the side the rake is offset towards.
- Changing the rake angle to left or right will distribute extraneous and oversized material in furrows to the left or right.
- Changing the pitch angle of the rake by adjusting the top link out to tilt the bottom in toward the tractor will result in more aggressive action and vice-versa.
- Setting the proper height on the adjustable gauge wheels will enable a consistent raking that is less affected by uneven ground conditions encountered by the tractor wheels.

After you have made your initial adjustments and settings, get back on the tractor and make a gear and engine rpm selection that will enable a ground speed safe and suitable for your ground and operating conditions. Lower the rake into operating position and begin working. Achieving the desired affect may require additional adjustments.

With a little practice you should begin to consistently achieve the desired results. Always keep safety uppermost in your mind and remember that before dismounting the tractor you must always set the park brake, lower your 3-point attachment to the ground, turn off the tractor and remove the ignition key. If you must park on a hillside you should always chock the tractor wheels for an extra measure of safety.

See **"Product Specifications"** on page 24 and **"Features and Benefits"** on page 25 for additional information on performance enhancing options.

Safety Alerts

WARNING

To avoid serious injury or death:

- *Avoid injury from a falling rake. Always check to make sure all hardware is secured before adjusting the rake.*
- *Do not come in contact with turntables or stick objects into the turntable holes while adjusting the unit's angle. Doing so can pinch or shear body extremities and objects.*
- *Never fully extend or retract hydraulic cylinder(s) without first checking to make sure the implement does not make contact with tractor tires. Extending implement into the tractor tires can result in loss of control and damage to the implement and/or tractor.*

IMPORTANT: The implement must be hitched to a tractor and raised off the ground several inches to make the following adjustments.

Rake Offset

Refer to Figure 4-1:

The rake may be offset in 15° increments up to 45° in either direction for a maximum offset of 26" (66 cm) left or right.

1. Read and follow all **"Safety Alerts"** above.
2. The Landscape Rake must be hitched to a tractor and raised off the ground several inches.
3. Rotate handle of bent pin (#3) 90° to the frame as shown on Figure 4-2.

NOTE: To adjust rake offset, bent pin (#3) must be fully out of hole in hitch turntable (#1).

4. With handle rotated 90°, pull bent pin (#3) up until pin is out of hole in hitch turntable (#1).
5. Hold bent pin up and rotate mainframe (#2) clockwise or counterclockwise up to 45° in 15° increments.
6. Once mainframe (#2) is rotated to the preferred angle, push bent pin (#3) fully down into one of the turntable holes to lock mainframe in place.
7. See **"Rake Angling"** below if rake frame (#4) needs to be angled to operator preference.

Rake Angling

The Landscape Rake can be angled manually up to 30° in 15° increments or hydraulically up to 45°. The optional Hydraulic Cylinder Kit must be installed to angle the rake with hydraulics.

Manual Angling

Refer to Figure 4-2:

1. Read and follow all **"Safety Alerts"** above.
2. Pull bent pin (#2) from hole in mainframe.
3. Rotate rake (#1) to the desired angle and reinsert bent pin (#2).

Hydraulic Angling

Refer to Figure 4-2:

NOTE: Make certain bent pin (#2) in Figure 4-2 is removed before operating the hydraulic cylinder.

1. Read and follow all **"Safety Alerts"** above.
2. Move tractor control lever forward to retract the hydraulic cylinder and rearward to extend the cylinder.
3. If cylinder operates in the opposite direction, switch quick disconnect couplings at the duplex outlet.

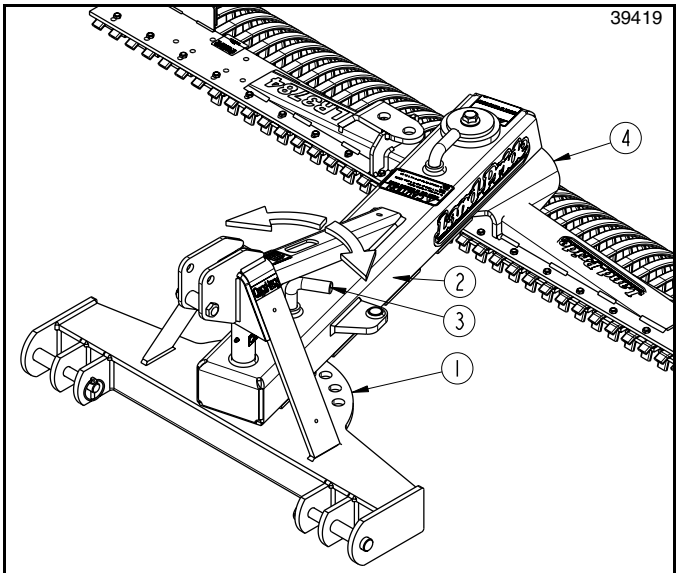

Offset shown with rake angled parallel to hitch frame.

Rake Offset
Figure 4-1

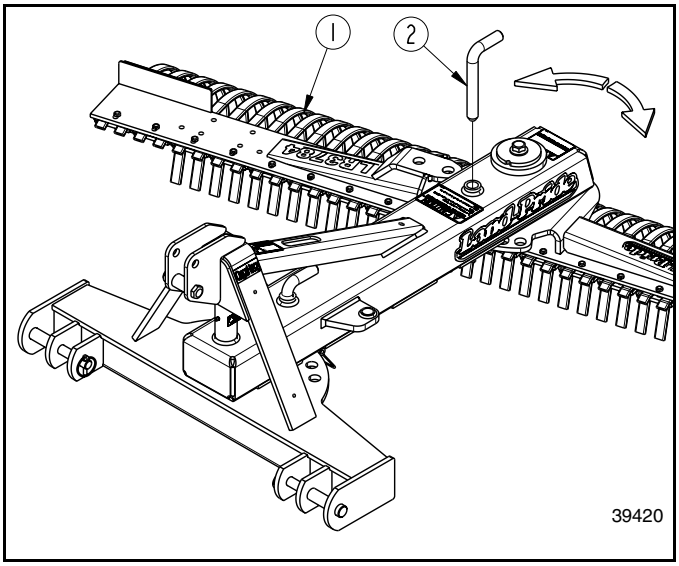

Rake Angling (manual shown)
Figure 4-2

Rake Pitch

Refer to Figure 1-2 on page 10:

The rake pitch (angle the rake teeth enter the ground) may be adjusted to increase or decrease the rake's ability to dig into the soil.

1. Read and follow all **"Safety Alerts"** on this page.
2. Lengthening tractor's top center 3-point link increases rake pitch making the rake more aggressive on the soil.
3. Shortening tractor's top center 3-point link decreases rake pitch making the rake less aggressive on the soil.

Gauge Wheels (Accessory)

Refer to Figure 4-3:

Removing spacers (#3 or #4) from beneath support arms (#5) will allow the rake to penetrate deeper into the soil and adding spacers will decrease the depth the rake can penetrate into the soil.

1. Read and follow all **"Safety Alerts"** on page 18.
2. Remove wire retaining pin (#2) from yoke shaft (#1).
3. Remove gauge wheel yoke shaft (#1) from support arm (#5).
4. Place desired number of spacers (#3 & #4) on the yoke shaft.
5. Reinsert gauge wheel assembly (#1) up into support arm (#5).
6. Place remaining spacers (#3 & #4) on the yoke shaft above support arm (#5) and secure with wire retaining pin (#2). Make certain wire retainer is fastened over end of pin.

Flip-Down Grader Blade (Accessory)

Refer to Figure 4-4:

The flip-down grader blade may be stored in the up position when not in use and lowered when needed.

Rotate Grader Blade Up For Storage

1. Read and follow all **"Safety Alerts"** on page 18.
2. Remove hairpin cotters (#4) and bent pins (#3) from storage holes "A".
3. Carefully pivot blade (#2) upward until captured by blade lock handles (#1).
4. Push blade lock handles (#1) fully down to capture blade (#2) in the up position.
5. Replace bent pin (#3) in lower holes "B" to secure blade (#2) in the raised position.
6. Secure bent pin (#3) with hairpin cotter (#4).

Rotate Grader Blade Down For Work

1. Read and follow all **"Safety Alerts"** on page 18.
2. Lower blade (#2) by removing hairpin cotters (#4) and bent pins (#3) from lower holes "B".
3. Pull on blade lock handle (#1) to allow blade (#2) to flip down.
4. Store bent pins (#3) in upper holes "A".
5. Secure bent pin (#3) with hairpin cotter (#4).

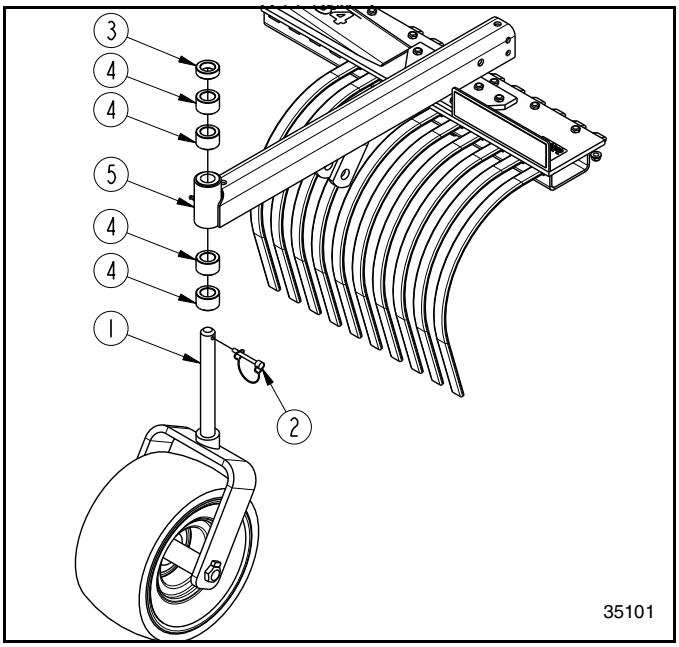

Gauge Wheel Adjustment Right-Hand Shown
Figure 4-3

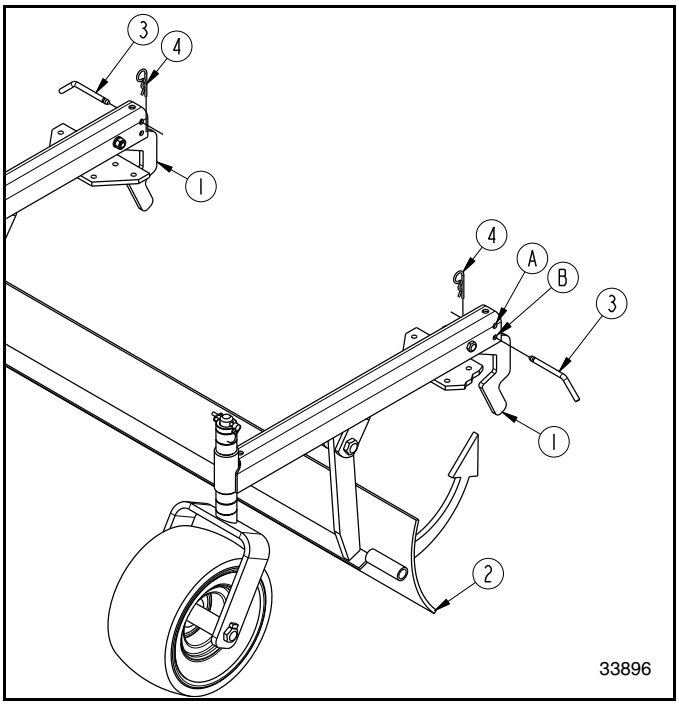

Grader Blade Lock Up Position
Figure 4-4

Maintenance

Proper servicing and adjustments are key to the long life of any implement. With careful inspection and routine maintenance, you can avoid costly downtime and repair.

Check all bolts after using unit for several hours to be sure they are tight. Replace any worn, damaged, or illegible safety labels by obtaining new labels from your Land Pride dealer.

The parts on your Landscape Rake have been specially designed and should only be replaced with genuine Land Pride parts. Do not alter the rake in a way which will adversely affect its performance.

DANGER

To avoid serious injury or death:

- *Always secure equipment with solid, non-concrete supports before working under it. Never go under equipment supported by concrete blocks or hydraulics. Concrete can break, hydraulic lines can burst, and/or hydraulic controls can be actuated even when power to hydraulics is off.*
- *Always check all rake hardware for tightness before moving or working around the unit. Make sure pivot retaining hardware is tighten to the correct torque. The rake can fall from its pivot mount if retaining hardware is loose or missing.*

WARNING

To avoid serious injury or death:

- *Allow only persons to perform maintenance on this implement who have been properly trained in its safe operation.*
- *Make sure controls are all in neutral position or park before starting the power machine.*
- *Perform scheduled maintenance. Check for loose hardware, missing parts, broken parts, structural cracks, and excessive wear. Make repairs before putting the implement back into service.*
- *Do not alter implement or replace parts on the implement with other brands. Other brands may not fit properly or meet OEM (Original Equipment Manufacturer) specifications. They can weaken the integrity and impair the safety, function, performance, and life of the implement. Replace parts only with genuine OEM parts.*
- *Hydraulic fluid under high pressure will penetrate the skin or eyes causing a serious injury. Wear protective gloves and safety glasses or goggles when working with hydraulic systems. Use a piece of cardboard or wood rather than hands when searching for leaks. If an accident occurs, seek immediate emergency medical care or gangrene may result. DO NOT DELAY.*

Long-Term Storage

Clean, inspect, service, and make necessary repairs to the implement when storing it for long periods and at the end of the season. This will help ensure the unit is ready for field use the next time you hook-up to it.

1. Remove all dirt and grease that has accumulated on the rake and then wash the surface thoroughly with a garden hose.
2. Inspect rake for loose, damaged, or worn parts and adjust or replace as needed.
3. Repaint parts where paint is worn or scratched to prevent rust. Ask your Land Pride dealer for aerosol touch-up paint. They are also available in touch-up bottles with brush, quarts, and gallon sizes by adding TU, QT, or GL to the end of the aerosol part number.

Land Pride Aerosol Touch-up Paint

Part No.	Part Description
821-011C	PAINT LP BEIGE SPRAY CAN
821-066C	PAINT ORANGE SPRAY CAN
821-070C	PAINT GP GLOSS BLACK SPRAY CAN

4. Replace all damaged or missing decals.
5. Lubricate as noted in **"Lubrication Points"** on page 21. A coating of oil may be applied to the unpainted surfaces of the rake teeth to minimize oxidation.
6. Store rake on a level surface in a clean, dry place. Inside storage will reduce maintenance and make for a longer rake life.
7. Follow all unhooking instructions on page 17 when disconnecting tractor from rake.

Ordering Replacement Parts

Land Pride offers equipment in factory standard Beige with black highlights. This implement is also available in Orange.

When ordering an optional color, the suffix number corresponding to the color must be added at the end of the part number. Parts ordered without the suffix number will be supplied in factory standard colors.

82 . . . . . Orange **85. . . . . Black**

For example, if you are ordering a replacement part with part number 555-555C and the existing part is orange, then add the suffix 82 to the end of the number to make the part number read 555-555C82.

Lubrication Points

Lubrication Legend	Multi-purpose spray lube	Multi-purpose grease lube	Multi-purpose oil lube	50 hrs	Intervals in hours at which lubrication is required

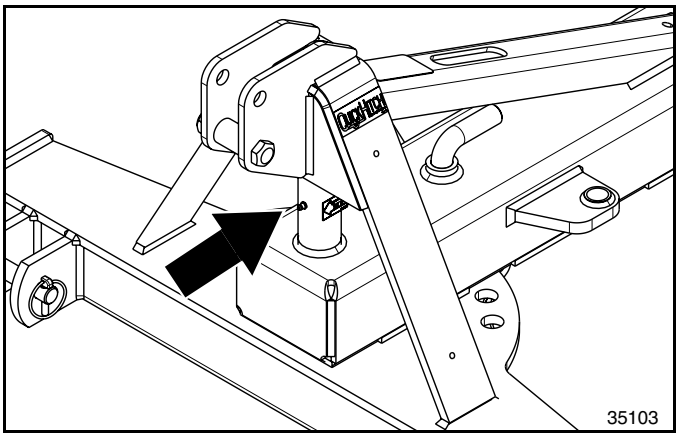

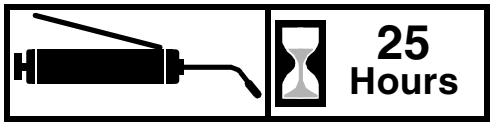

Hitch Pivot Shaft

Type of Lubrication: Multi-Purpose Grease

Quantity = Until grease emerges

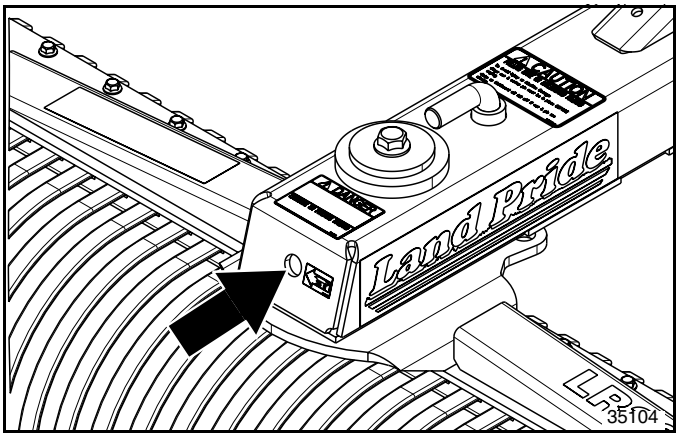

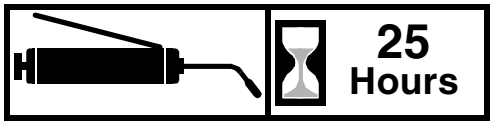

Rake Pivot Shaft

Type of Lubrication: Multi-Purpose Grease

Quantity = Until grease emerges

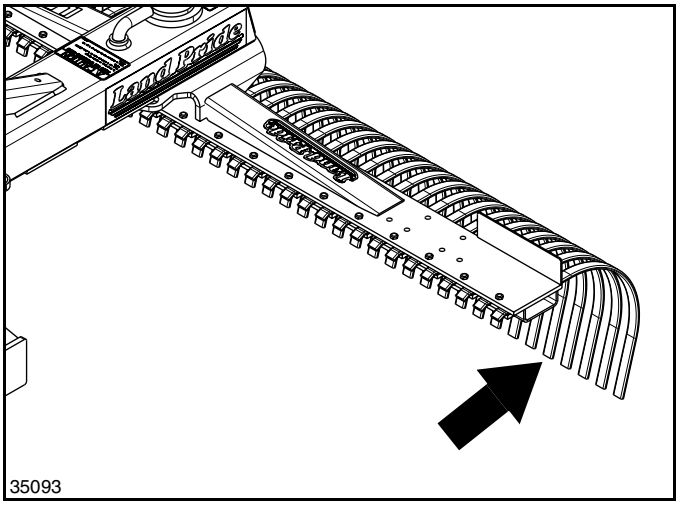

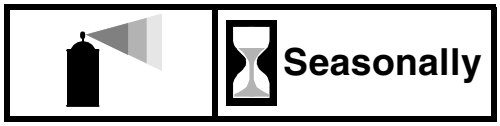

Rake Teeth

Grease before extended non-use or seasonally.

Type of Lubrication: Multi-Purpose
Quantity = Generously

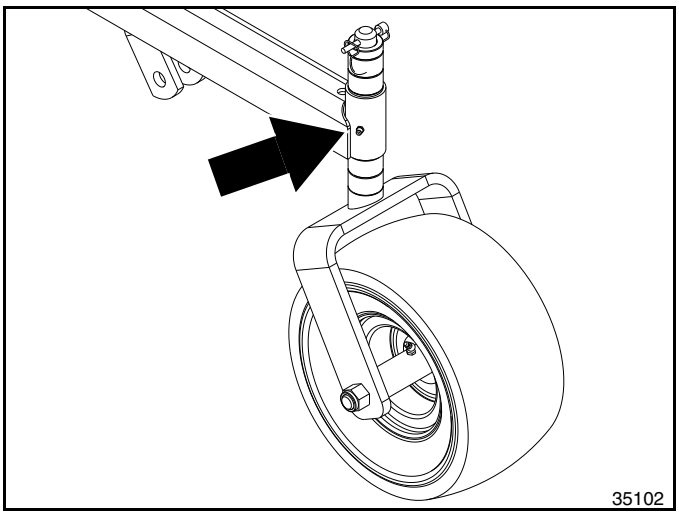

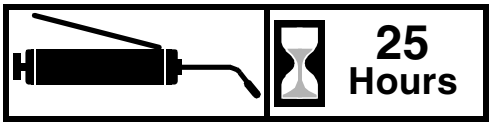

(Accessory)

Gauge Wheel Yoke Spindle

Grease gauge wheel zerk every 25 hours.

Type of Lubrication: Multi-Purpose
Quantity = Until grease begins to emerge.

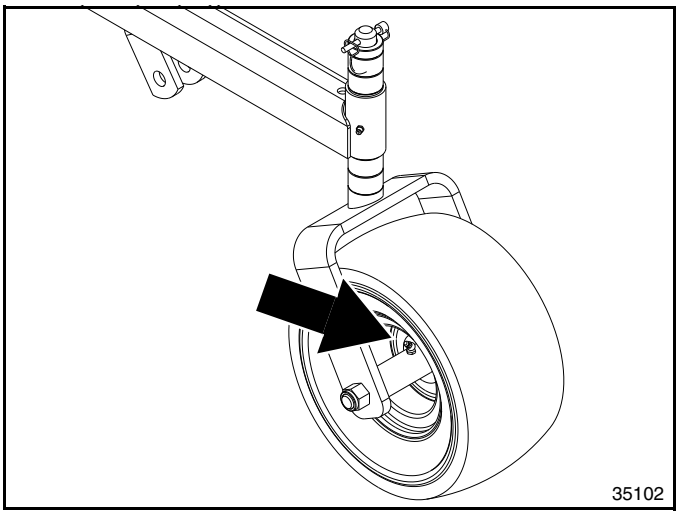

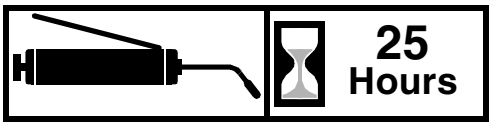

(Accessory)

Gauge Wheel Axle

Grease gauge wheel axle every 25 hours.

Type of Lubrication: Multi-Purpose
Quantity = Until grease begins to emerge.

Dual Gauge Wheel

NOTE: Arm of Dual Gauge Wheel provides a mount to support Flip Down Grader Blade Accessory.

Kit Bundles

302-174A . . . . . DUAL GAUGE WHEELS-WIDE TIRE 13" x 6.5" x 6"
302-176A . . . . . DUAL GAUGE WHEELS-NARROW TIRE 13" x 4" x 6"

Grader Blade Mounting Arm

NOTE: Includes two Grader Blade Mounting Arms to support Flip Down Grader Blade Accessory when Dual Gauge Wheel Accessory is not installed.

302-260A . . . . . GRADER BLADE MOUNT LESS DUAL GAUGE WHEEL

Flip-Down Grader Blade With End Plates

NOTE: Flip-Down Grader Blade Assembly is complete with end plates. Grader Blade Mounting Arms must be purchased separately if Dual Gauge Wheels are not mounted on the Landscape Rake.

Kit Bundles

302-106A . . . . . 7' (2.13 m) GRADER BLADE
302-107A . . . . . 8' (2.44 m) GRADER BLADE

Rear Blade Attachments

NOTE: The Landscape Rake can be converted to a Rear Blade by removing the Rake Assembly from its Main Frame and attaching a "Rear Blade Attachment" to the Main Frame.

Any of the Rear Blade Kit Bundles below will fit the Main Frame of all LR37 Series Landscape Rakes.

301-399S . . . . . 72" (1.83 m) REAR BLADE ATTACHMENT
301-400S . . . . . 84" (2.13 m) REAR BLADE ATTACHMENT
301-401S . . . . . 96" (2.44 m) REAR BLADE ATTACHMENT

Hydraulic Angling

NOTE: The Hydraulic Angling Kit allows operator to change rake angle from the tractor seat.

Kit Bundle

302-335A . . . . . KIT, LR37 HYDRAULIC ANGLE

LR37 Series Landscape Rakes

	LR3784	LR3796
Rake width	84" (2.13 m)	96" (2.44 m)
Approximate weight	488 lbs (221 kgs)	514 lbs (233 kgs)
Number of teeth	42	48
Horsepower rating	30-80 (22-60 kW)	
Hitch category	Cat. I & II combination (Quick hitch compatible)	
Pivot shaft diameter	2 1/2" (6.4 cm)	
Rake height	16 1/2" 41.9 cm)	
Parking stand	Standard	
Individual replaceable teeth	Standard	
Teeth size	5/16" x 1" wide (8 mm x 2.5 cm)	
Teeth Spacing	2" (5 cm) Centers	
Teeth material	High-carbon, spring steel	
Rake angle **Manually (Standard)** **Hydraulically (Accessory)**	Five positions, maximum 30° right or left in 15° increments Any Degree up to 45°	
Rake manual offset	Seven positions, maximum 45° right or left in 15° increments	
Dual gauge wheels* **(Accessory)**	Dual narrow width wheels 13" x 4" x 6" or Dual wide width wheels 13" x 6.5" x 6"	
Flip-down grader blade **(Accessory)**	Flip-down, self-supporting grader blade with Blade-up locking handles and locking pins	
Rear blade attachment **(Accessory)**	Available in 72", 84" & 96" (1.83 m, 2.13 m, & 2.44 m) working widths	

* Dual gauge wheels are capable of supporting Flip Down Grader Blade Accessory

39418

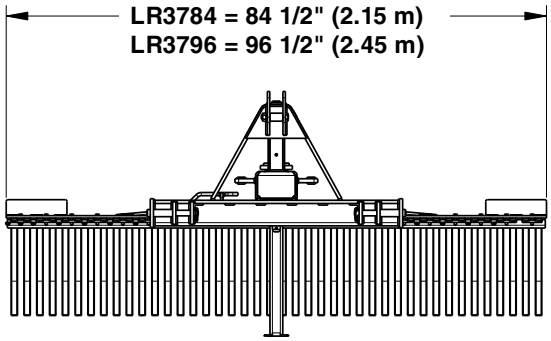

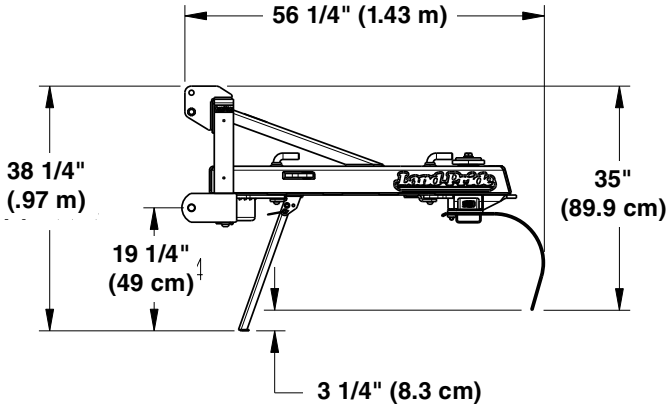

LR37 Series Landscape Rakes

Features	Benefits
Two working widths	Covers tire tracks and allows user to cover large areas in less time.
Tractor horsepower: 30-80 (22-60 kW)	Fits many tractors with a Cat. I or Cat. II 3-point hitch.
Quick hitch compatible	Fits Land Pride Quick Hitch for a quick and easy one person hook-up.
Retractable parking stand	Keeps frame off the ground and makes hook-up easier.
Pivot shaft: 2 1/2" (6.4 cm)	Heavy-duty shaft. Heaviest in its class.
Rake height: 16 1/2" (41.9 cm)	Can move a great deal of material.
Rake teeth support channel	Design with channel support. This design supports the rake teeth better than competitor models. Prevents teeth entanglement and keeps attachment hardware from working loose.
High-carbon spring steel teeth 5/16" x 1" (8 mm x 2.5 cm)	Sized to eliminate premature bending and tooth breakage. Constructed of materials that have “memory” to spring back to shape.
Individual replaceable teeth	Makes replacing a damaged tooth quick and easy without removing all of the teeth.
Rake angle, 5 positions	Versatility in operation. Vary how much material to move.
Rake offset, 7 positions	Versatility in operation. Allows the unit to work closer to objects on the side the rake is of set towards.
Dual gauge wheels (Accessory)	Gives operator better depth control. Wide & narrow wheels available.
Flip-down grader blade with end plates (Accessory)	Enables the rake to perform light blading duties for moving and leveling dirt as well as other materials. Grader blade can be flipped up when not in use.
Rear blade attachment (Accessory)	The rake assembly can be removed from the main frame and a rear blade attached to give the Land Pride rake versatility.
Hydraulic angling (Accessory)	Allows operator to change rake angle from the tractor seat.

Torque Values Chart for Common Bolt Sizes

Bolt Size (inches)	Bolt Head Identification: Grade 2		Grade 5		Grade 8	
in-tpi [1]	N · m [2]	ft-lb [3]	N · m	ft-lb	N · m	ft-lb
1/4" - 20	7.4	5.6	11	8	16	12
1/4" - 28	8.5	6	13	10	18	14
5/16" - 18	15	11	24	17	33	25
5/16" - 24	17	13	26	19	37	27
3/8" - 16	27	20	42	31	59	44
3/8" - 24	31	22	47	35	67	49
7/16" - 14	43	32	67	49	95	70
7/16" - 20	49	36	75	55	105	78
1/2" - 13	66	49	105	76	145	105
1/2" - 20	75	55	115	85	165	120
9/16" - 12	95	70	150	110	210	155
9/16" - 18	105	79	165	120	235	170
5/8" - 11	130	97	205	150	285	210
5/8" - 18	150	110	230	170	325	240
3/4" - 10	235	170	360	265	510	375
3/4" - 16	260	190	405	295	570	420
7/8" - 9	225	165	585	430	820	605
7/8" - 14	250	185	640	475	905	670
1" - 8	340	250	875	645	1230	910
1" - 12	370	275	955	705	1350	995
1-1/8" - 7	480	355	1080	795	1750	1290
1-1/8" - 12	540	395	1210	890	1960	1440
1-1/4" - 7	680	500	1520	1120	2460	1820
1-1/4" - 12	750	555	1680	1240	2730	2010
1-3/8" - 6	890	655	1990	1470	3230	2380
1-3/8" - 12	1010	745	2270	1670	3680	2710
1-1/2" - 6	1180	870	2640	1950	4290	3160
1-1/2" - 12	1330	980	2970	2190	4820	3560

Bolt Size (Metric)	Bolt Head Identification: Class 5.8		Class 8.8		Class 10.9	
mm x pitch [4]	N · m	ft-lb	N · m	ft-lb	N · m	ft-lb
M 5 X 0.8	4	3	6	5	9	7
M 6 X 1	7	5	11	8	15	11
M 8 X 1.25	17	12	26	19	36	27
M 8 X 1	18	13	28	21	39	29
M10 X 1.5	33	24	52	39	72	53
M10 X 0.75	39	29	61	45	85	62
M12 X 1.75	58	42	91	67	125	93
M12 X 1.5	60	44	95	70	130	97
M12 X 1	90	66	105	77	145	105
M14 X 2	92	68	145	105	200	150
M14 X 1.5	99	73	155	115	215	160
M16 X 2	145	105	225	165	315	230
M16 X 1.5	155	115	240	180	335	245
M18 X 2.5	195	145	310	230	405	300
M18 X 1.5	220	165	350	260	485	355
M20 X 2.5	280	205	440	325	610	450
M20 X 1.5	310	230	650	480	900	665
M24 X 3	480	355	760	560	1050	780
M24 X 2	525	390	830	610	1150	845
M30 X 3.5	960	705	1510	1120	2100	1550
M30 X 2	1060	785	1680	1240	2320	1710
M36 X 3.5	1730	1270	2650	1950	3660	2700
M36 X 2	1880	1380	2960	2190	4100	3220

[1] in-tpi = nominal thread diameter in inches-threads per inch

[2] N· m = newton-meters

[3] ft-lb= foot pounds

[4] mm x pitch = nominal thread diameter in millimeters x thread pitch

Torque tolerance + 0%, -15% of torquing values. Unless otherwise specified use torque values listed above.
All locknuts or lubricated fasteners: Use 75% of torque value. (i.e. 1/2"-13 GR5 = 76 ft-lb; 75% of 76 or .75 x 76 = 57 ft-lb)

Warranty

Land Pride warrants to the original purchaser that this Land Pride product will be free from defects in material and workmanship beginning on the date of purchase by the end user according to the following schedule when used as intended and under normal service and conditions for personal use.

Overall Unit: One year Parts and Labor

Rake Teeth: Considered wear items

This Warranty is limited to the repair or replacement of any defective part by Land Pride and the installation by the dealer of any such replacement part, and does not cover common wear items. Land Pride reserves the right to inspect any equipment or parts which are claimed to have been defective in material or workmanship.

This Warranty does not apply to any part or product which in Land Pride's judgment shall have been misused or damaged by accident or lack of normal maintenance or care, or which has been repaired or altered in a way which adversely affects its performance or reliability, or which has been used for a purpose for which the product is not designed. Misuse also specifically includes failure to properly maintain oil levels, grease points, and driveline shafts.

Claims under this Warranty should be made to the dealer which originally sold the product and all warranty adjustments must be made through an authorized Land Pride dealer. Land Pride reserves the right to make changes in materials or design of the product at any time without notice.

This Warranty shall not be interpreted to render Land Pride liable for damages of any kind, direct, consequential, or contingent to property. Furthermore, Land Pride shall not be liable for damages resulting from any cause beyond its reasonable control. This Warranty does not extend to loss of crops, any expense or loss for labor, supplies, rental machinery or for any other reason.

No other warranty of any kind whatsoever, express or implied, is made with respect to this sale; and all implied warranties of merchantability and fitness for a particular purpose which exceed the obligations set forth in this written warranty are hereby disclaimed and excluded from this sale.

This Warranty is not valid unless registered with Land Pride within 30 days from the date of purchase by the end user.

IMPORTANT: The Online Warranty Registration should be completed by the dealer at the time of purchase. This information is necessary to provide you with quality customer service.

Model Number _____ **Serial Number** _____

Corporate Office: P.O. Box 5060
Salina, Kansas 67402-5060 USA
www.landpride.com