Rear Blades

RBT40, RBT45 & RBT55 Series

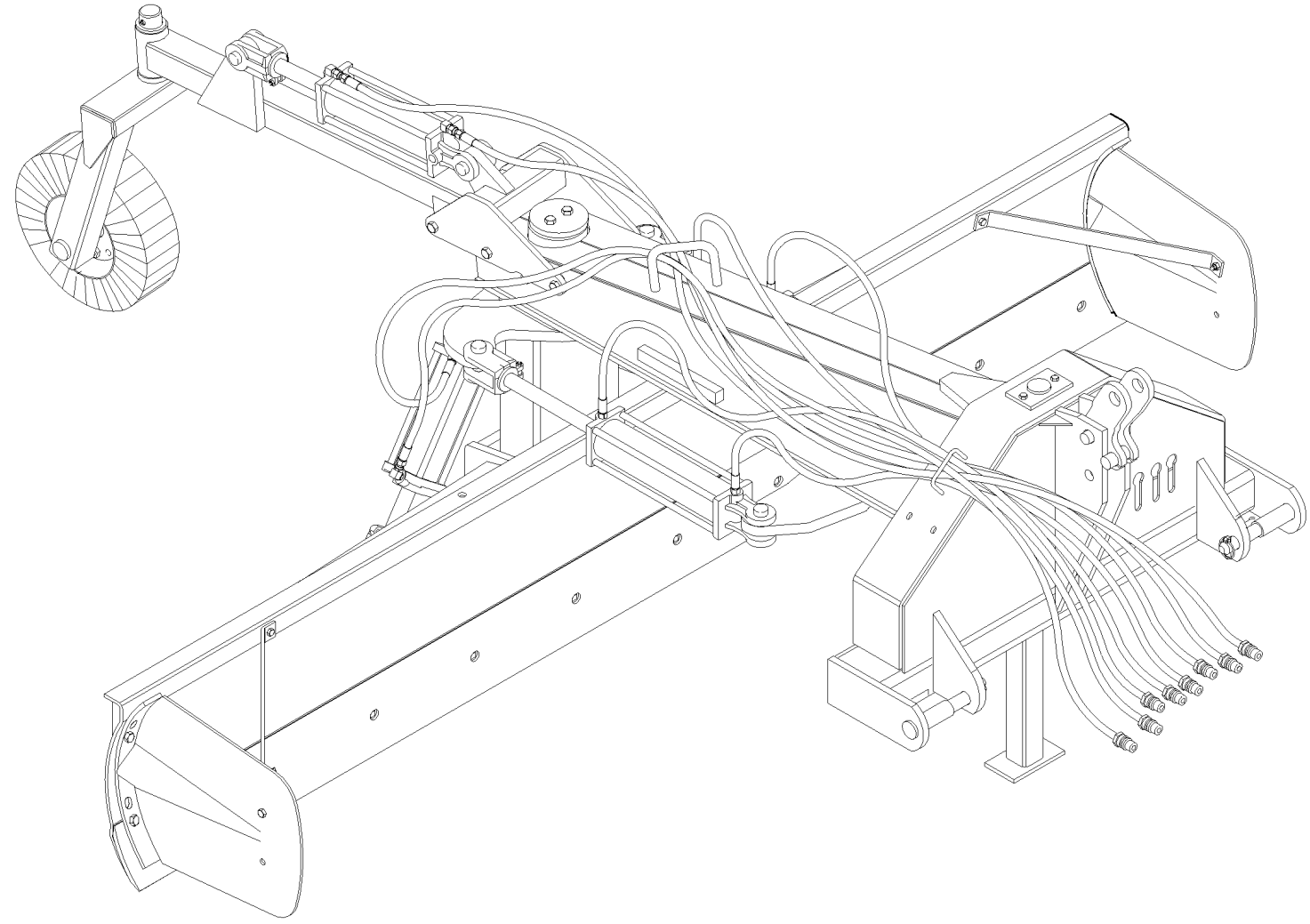

301-205P
Parts Manual

Read the Operator's Manual entirely. When you see this symbol, the subsequent instructions and warnings are serious - follow without exception. Your life and the lives of others depend on it!

© Copyright 2022 Printed 07/13/2022

Cover photo may show optional equipment not supplied with standard unit.

Table Of Contents

Section 1: Introduction **2**
- *Using This Manual* *2*
- *Manual Replacement Information* *2*
- *Manual Revisions* *2*
- *Touch-up Paint* *2*
- *Hardware Legend* *3*
- *Replacement Hardware* *3*
- *Serial Numbers* *3*
- *Part Number Service Coding* *3*

Section 2: Frames **4**
- *Blade RBT55 Series* *4*
- *Frame and Hitch RBT55 Series* *6*
- *Main Frame Components RBT40 Series (S/N _____-)* *8*
- *Main Frame Components RBT45 Series (S/N _____-)* *12*
- *Main Frame Components RBT40 Series (S/N _____+)* *16*
- *Main Frame Components RBT45 Series (S/N _____+)* *18*
- *Manual Offset, Angling And Tilt RBT40 Series* *20*
- *Manual Offset, Angling And Tilt RBT45 Series* *22*

Section 3: Hydraulics **24**
- *Hydraulic Cylinder (810-126C) Cross S/N 1323732-* .. *24*
- *Hydraulic Cylinder (810-126C) Cross S/N 1323733+* .. *26*
- *Hydraulic Cylinder (810-126C) Midway* *28*
- *Hydraulic Cylinder (810-195C) Cross* *30*
- *Hydraulic Cylinder (810-195C) Midway* *32*
- *Hydraulic Cylinder (810-213C) Midway* *34*
- *Hydraulic Cylinder (810-384C) Cross* *36*
- *Hydraulic Cylinder (810-384C) Midway* *38*
- *Hydraulic Cylinder (810-413C) Cross 2500 PSI* *40*
- *Hydraulic Cylinder (810-413C) Cross 3000 PSI* *42*
- *Hydraulic Cylinder (810-413C) Midway* *44*
- *Hydraulic Cylinder (810-514C) Midway* *46*
- *Hydraulic Cylinder (810-514C) Red Lion* ... *48*
- *Hydraulic Cylinder (810-624C) Midway* *50*
- *Hydraulic Cylinder (810-624C) Red Lion* .. *52*
- *Hydraulic Cylinder (850-449C) Cross* *54*
- *Hydraulics RBT40 Series* *56*
- *Hydraulics RBT45 Series* *58*
- *Hydraulics RBT55 Series* *60*

Section 4: Decals **62**
- *Decals RBT40 Series* *62*
- *Decals RBT45 Series* *64*
- *Decals RBT55 Series* *66*
- *Touch-up Paints - LP* *68*

Section 5: Options & Accessories **70**
- *End Plates RBT40 Series* *70*
- *End Plates RBT45 Series* *72*
- *End Plates RBT55 Series* *74*
- *Gauge Wheel Caster RBT45 Series* *76*
- *Gauge Wheel Caster RBT55 Series* *78*
- *Gauge Wheel Dual Manual RBT45 Series* *80*
- *Gauge Wheel Dual Manual RBT55 Series* *82*
- *Gauge Wheel Hydraulic RBT45 Series* *84*
- *Gauge Wheel Hydraulic RBT55 Series* *86*
- *Gauge Wheel Single Manual RBT45 Series* *88*
- *Gauge Wheel Single Manual RBT55 Series* *90*
- *Hydraulic Cushion Valve RBT40 Series* *92*
- *Hydraulic Cushion Valve RBT45 Series* *94*
- *Hydraulic Selector Valve RBT40 Series* *96*
- *Hydraulic Selector Valve RBT45 Series* *98*
- *Hydraulic Selector Valve RBT55 Series* *100*
- *Manual Offset, Angling And Tilt RBT55 Series* *102*
- *Skid Shoes RBT40 & RBT45 Series* *104*
- *Skid Shoes RBT55 Series* *106*
- *Wear Plate RBT55 Series* *108*

This Page Intentionally Left Blank

General Information

Using This Manual

This manual is divided into sections. The first section contains General Information. The remaining sections divide the machine into segments (i.e. Frames, Drives, Hydraulics, etc.) which illustrate and list all parts. A Parts Number Index is located at the back of the book.

The Land Pride parts in this manual are specially designed for this machine and should be replaced with Land Pride parts only.

The information in this manual is current at time of printing. Some parts may change to assure top performance.

Right-hand and left-hand as used in this manual are determined by facing the direction the machine will travel while in use.

Below is an example of two facing pages from a parts manual. Familiarize yourself with the type of information contained on these pages.

Manual Replacement Information

Replacement manuals are available. Refer to our website at www.landpride.com or e-mail us at lit@landpride.com for additional information. Our website continues to provide the most up-to-date manuals available.

Touch-up Paint

Repaint parts where paint is worn or scratched to prevent rust. Aerosol cans and touch-up bottles with brush applicator are available through your local dealer. Also available are quart and gallon size paints. Add QT or GL to end of the Aerosol P/N.

Land Pride color descriptions and part numbers are listed on the "Land Pride Touch-Up Paints" page in the "Decals" section of this book.

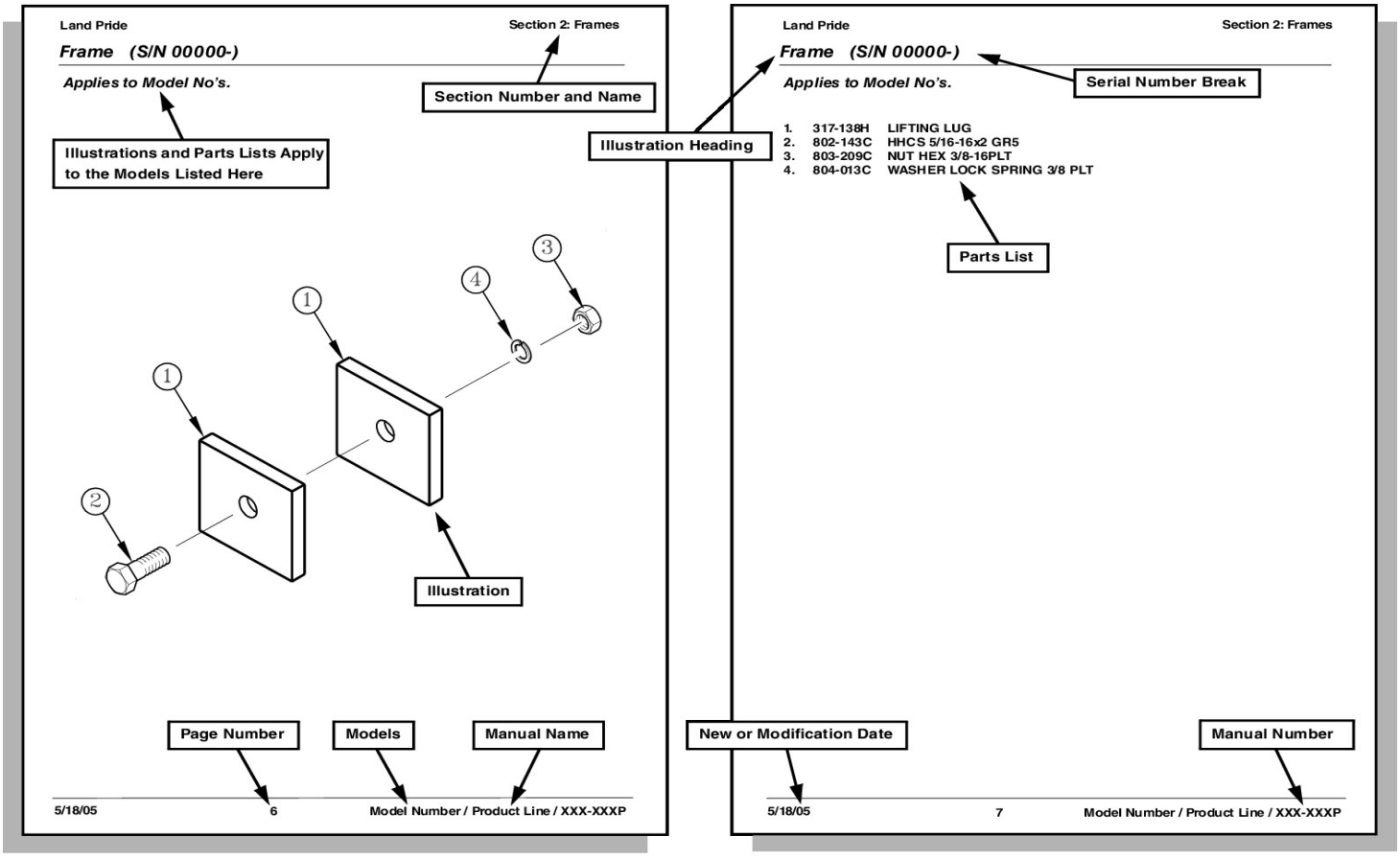

© Copyright 2022. All rights Reserved

Land Pride provides this publication "as is" without warranty of any kind, either expressed or implied. While every precaution has been taken in the preparation of this manual, Land Pride assumes no responsibility for errors or omissions. Neither is any liability assumed for damages resulting from the use of the information contained herein. Land Pride reserves the right to revise and improve its products as it sees fit. This publication describes the state of this product at the time of its publication, and may not reflect the product in the future. The illustrations in this manual are not intended for safe and proper assembly or disassembly of equipment. The illustrations are intended for ordering parts only.

Land Pride is a registered trademark.

All other brands and product names are trademarks or registered trademarks of their respective holders.

Printed in the United States of America.

Hardware Legend

AR	As Required
BLADE	Blade Bolt
C	Cap Screw
CP	Cotter Pin
CPHSSS	Cup Point Hex Socket Set Screw
CPSHSS	Cup Point Square Head Set Screw
CPSQHSS	Cup Point Square Head Set Screw
CRFCHMS3	Cross Recess Flat Countersunk Head Machine Screw
CRPHMS	Cross Recess Pan Head Machine Screw
CRPHTFS	Cross Recess Pan Head Thread Forming
CRRHMS	Cross Recess Round Head Machine Screw
CRTHMS	Cross Recess Truss Head Machine Screw
CSNB	Countersunk Square Neck Bolt
FHMS	Flat Head Machine Screw
FTC	Full Thread Cap Screw
H	Hex Nut
HCLN	Hex Center Lock Nut
HFLCS	Hex Flange Lock Cap Screw
HFS	Hex Flange Screw
HFSLN	Hex Flange Serrated Lock Nut
HFSS	Hex Flange Serrated Screw
HHCS	Hex Head Cap Screw or Metric Bolt
HSBHCS	Hex Socket Button Head Cap Screw
HSFCHCS	Hex Socket Flat Countersunk Head Cap Screw
HSHCS	Hex Socket Head Cap Screw
HSSS	Hex Socket Head Screw
HTLN	Hex Top Lock Nut
HWHCS	Hex Washer Head Cap Screw
HWHMS	Hex Washer Head Machine Screw
HXBHCS	Hex Socket Button Head Cap Screw
J	Hex Jam Nut
JIC	37 Degree Tapered Thread
L	Helical Spring Lock Washer
LUG	Lug Bolt
NFC	National Fine Cap Screw
NPSM	National Pipe Straight Mechanical
NPTF	National Pipe Taper Fuel
P	Wide Plain Washer
PHMS	Pan Head Machine Screw
PLOW	Plow Bolt
RHMS	Round Head Machine Screw
RHSNB	Round Head Square Neck Bolt
SCREW LEVELING	Leveling Screw
SCREW THUMB	Thumb Screw
SCREW WELD	Weld Screw
SFCHMS	Slotted Flat Countersunk Head Machine Screw
SFHMS	Slotted Fillister Head Machine Screw
SP	Special
SP SCREW	Special Screw
SQHSS	Square Head Set Screw
SRHMS	Slotted Round Head Machine Screw
SSS	Socket Set Screw
STCS	Self Tapping Cap Screw
STHMS	Slotted Truss Head Machine Screw
WHEEL	Wheel Studs and Hub Long Bolts
WING	Wing Bolt

Replacement Hardware

The **Hardware Legend** above lists hardware abbreviations used in the parts list. All bolts and nuts are Grade 5 unless otherwise noted. The use of improper grades of hardware can result in personal injury, damage to equipment, or loss of property.

Colored Replacement Parts

Land Pride offers replacement parts in factory standard colors and also on select models in Green, Orange, Red and Blue. Because of the variety of colors available, special attention must be given to the part number to prevent ordering the wrong replacement part.

A suffix number corresponding to one of the colors below must be added at the end of Land Pride's part number when ordering a replacement part with that color.

81 . . . . . Green **83 . . . . .Red**
82 . . . . . Orange **84 . . . . .Blue**

For example, if you are ordering a replacement part with part number 555-555C and the part you need is red, then add the suffix 83 to the end of the number to make the part number read 555-555C83. Parts ordered without a suffix number will be supplied in factory standard colors.

Black Replacement Parts

Some parts are factory standard black and some must be special ordered black. If your part is special ordered black, a second part number with the additional suffix number 85 on the end will be available. In this situation you must order that part with the suffix number for it to be black. Parts that are factory standard black will not have the suffix number.

Part Number Service Coding

Within the parts list some part numbers are coded for revisions and interchangeability. See notations in revision column.

Serial Numbers

Always use the serial and model number when ordering parts. Refer to the Operator's Manual for serial number plate location.

(S/N 20001+)	Includes serial numbers 20001 and above (to the latest number)
(S/N 10001 to 20000)	Includes serial numbers between and including 10001 and 20000
(S/N 10000-)	Includes serial numbers 10000 and below (to the earliest number)

Blade RBT55 Series

Applies to Models: RBT55108, RBT55120, RBT5596

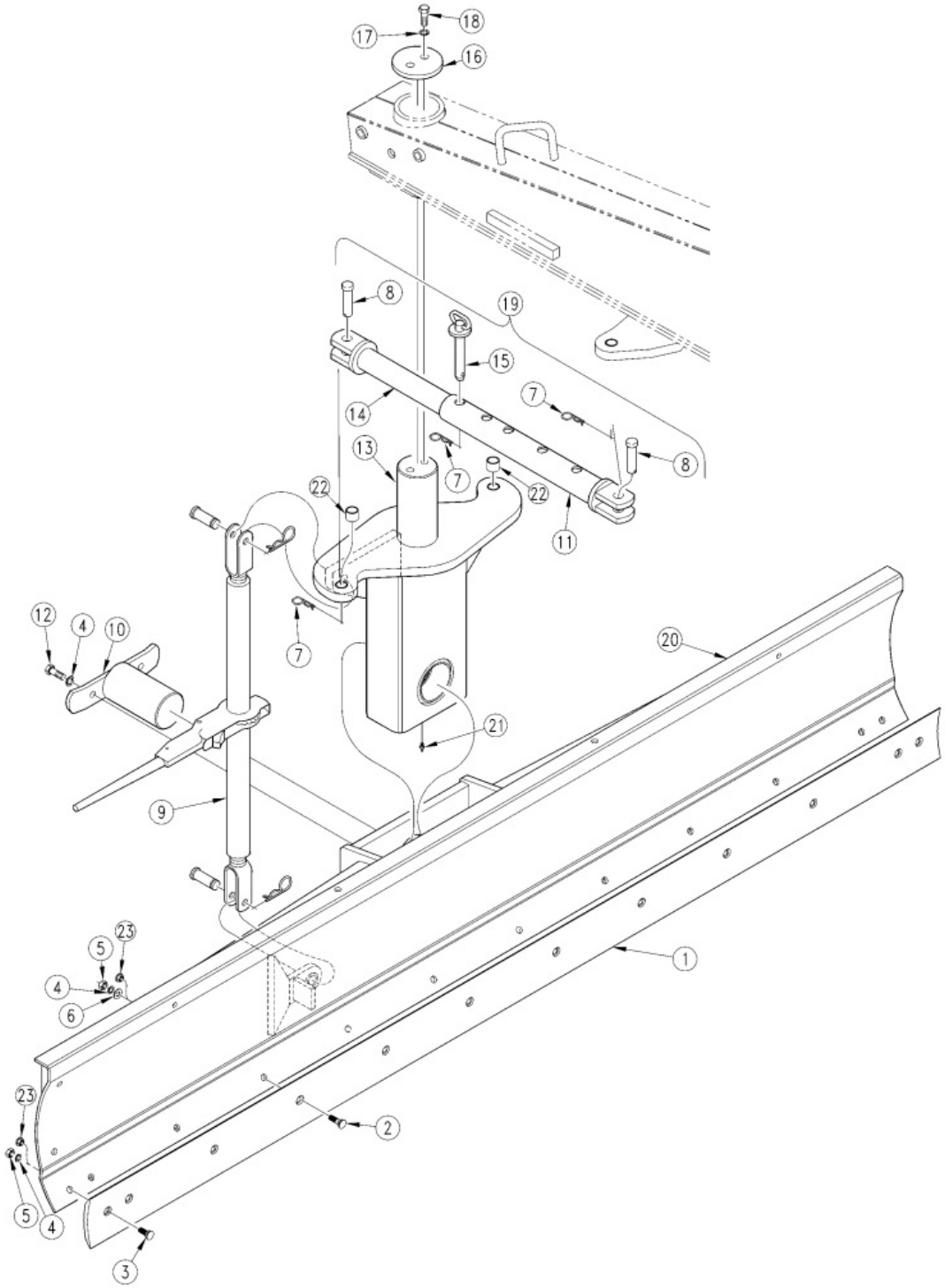

Applies to Models: RBT55108, RBT55120, RBT5596

Ref.	Part No.	Part Description	Comments
	DWG 12501	Drawing Image Number	
	301-166A	RBT5596 MOLDBOARD ASSY	Obsolete Includes one of item 1 part no. 820-035C; 10; 20 part no. 301-157H; part no. 818-112C; 818-163C; 818-199C and 818-298C; two of items 3; 12 and part no. 818-230C; eight of items 2 and 6; ten of item 5 and twelve of item 4.
	301-167A	RBT55108 MOLDBOARD ASSY	Obsolete Includes one of item 1 part no. 820-072C; 10; 20 part no. 301-156H; part no. 818-200C; 818-163C; 818-199C and 818-298C; two of items 3; 12 and part no. 818-230C; nine of items 2 and 6; eleven of item 5 and thirteen of item 4.
	301-168A	RBT55120 MOLDBOARD ASSY	Includes one of item 1 part no. 820-073C; 10; 20 part no. 301-155H; part no. 818-200C; 818-163C; 818-199C and 818-298C; two of items 3; 12 and part no. 818-230C; ten of items 2 and 6; twelve of item 5 and fourteen of item 4.
1	820-035C	GRADER BLADE 1/2 X 6 X 95 1/2	
1	820-072C	GRADER BLADE 1/2 X 6 X 107 1/2	
1	820-073C	GRADER BLADE 1/2 X 6 X 119 1/2	
2	802-288C	PLOW 5/8-11X2 GR5	
3	802-206C	PLOW 5/8-11X1 3/4 GR5	
4	804-022C	WASHER LOCK SPRING 5/8 PLT	Replaced By #23
5	803-021C	NUT HEX 5/8-11 PLT	Replaced By #23
6	804-021C	WASHER FLAT 5/8 SAE PLT	Replaced By #23
7	805-088C	PIN, HAIR COTTER 3/16 WIRE DIA	
8	805-090C	PIN CLVS 1.0X3.20 USBL	
9	890-177C	RATCHET JACK - HEAVY DUT	
10	301-158H	TILT PIN WELDMENT	
11	300-145H	LINK, MANUAL WELDMENT-FEMALE	
12	802-207C	HHCS 5/8-18X1 1/2 GR5	
13	301-153H	T55 PIVOT WELDMENT	
14	300-146H	LINK, MANUAL WELDMENT-MALE	
15	805-007C	PIN HTCH 1.0X3.38 USBL W/PIN	
16	301-209D	PIVOT CAP	
17	804-023C	WASHER LOCK SPRING 3/4 PLT	
18	802-292C	HHCS 3/4-16X1 3/4 GR5	
19	300-150A	MAN. OFFSET & ANGLE LINK ASSY	
20	301-329H	10' -55 T SERIES BLADE WLDMENT	S/N 633889+
20	301-155H	RPBY 301-329H	(Obsolete) S/N 633888-
20	301-156H	RPBY 301-329H	Obsolete
20	301-157H	RPBY 301-329H	Obsolete
21	800-080C	GREASE ZERK 1/4-28 THD FORMING	
22	890-005C	BUSHING CYL 1 1/4 X 1 X 1	
23	803-304C	NUT HEX WHIZ 5/8-11 PLT	S/N 815206+
23	803-263C	NUT HEX FLANGE LOCK 5/8-11 PLT	S/N 815205-

Frame and Hitch RBT55 Series

Applies to Models: RBT55108, RBT55120, RBT5596

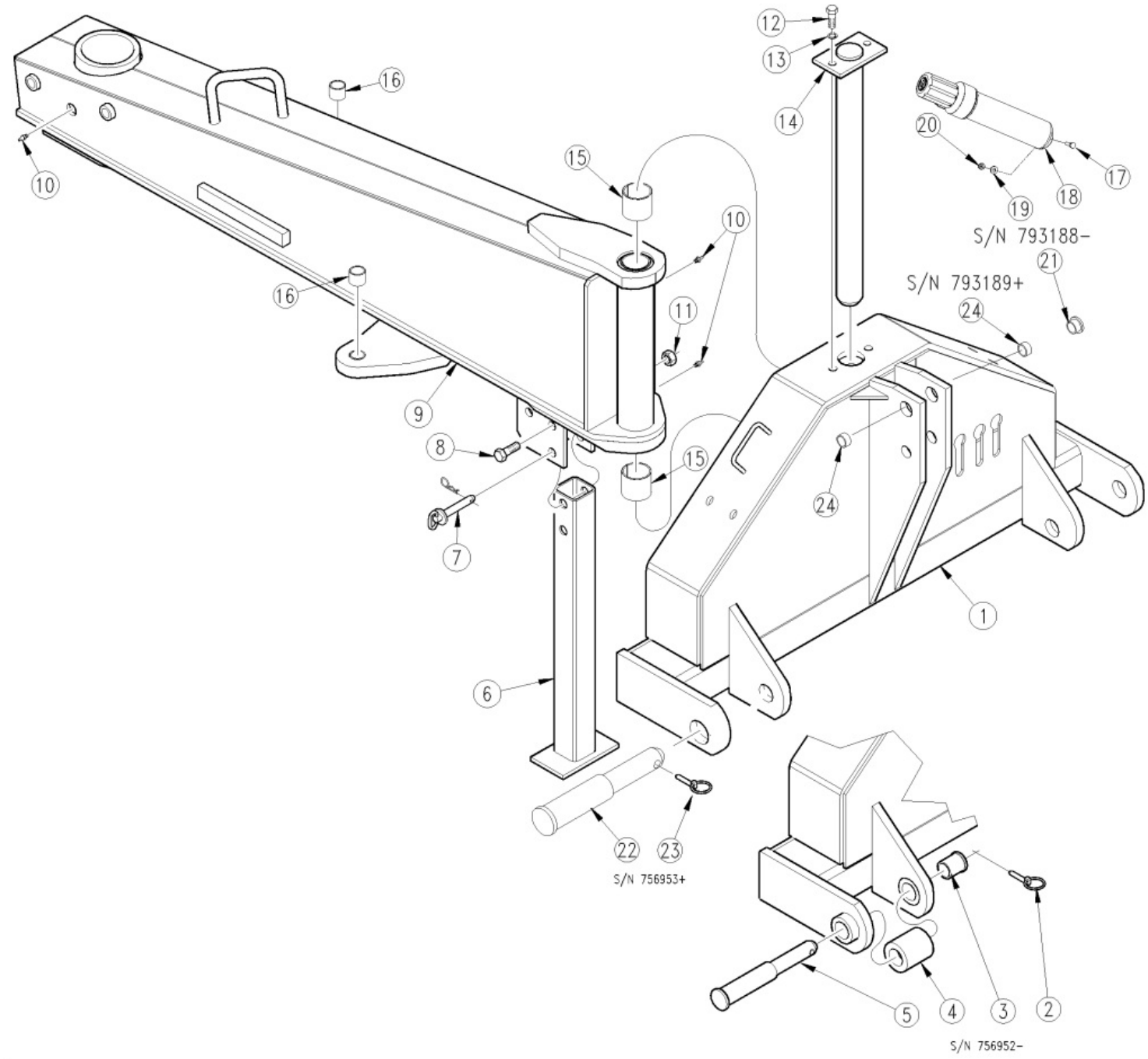

Frame and Hitch RBT55 Series

Applies to Models: RBT55108, RBT55120, RBT5596

Ref.	Part No.	Part Description	Comments
	DWG 12493	Drawing Image Number	
1	300-139H	HITCH WELDMENT-T55	
1	300-139H81	HITCH WELDMENT-T55 GREEN	
1	300-139H82	HITCH WELDMENT-T55 ORANGE	
1	300-139H83	HITCH WELDMENT-T55 RED	
2	805-103C	PIN LINCH 7/16 X 1 3/4	S/N 756952-
3	300-318D	HITCH BUSHING	S/N 756952-
4	316-100D	HITCH SPACER	S/N 756952-
5	316-099D	PIN HTCH C2-C3 10.25 L	S/N 756952-
6	300-087H	STAND PIPE WELD	
6	300-144H	RPBY 300-087H	Obsolete
7	805-081C	PIN HTCH .75X4.25 USBL W/PIN	
8	802-192C	HHCS 3/4-10X4 1/2 GR5	
9	300-143H	MAIN FRAME	
9	300-143H81	MAIN FRAME GREEN	
9	300-143H82	MAIN FRAME ORANGE	
9	300-143H83	MAIN FRAME RED	
10	800-080C	GREASE ZERK 1/4-28 THD FORMING	
11	803-026C	NUT LOCK 3/4-10 PLT	
12	802-091C	HHCS 1/2-13X1 1/2 GR5	
13	804-015C	WASHER LOCK SPRING 1/2 PLT	
14	300-096H	FRONT PIVOT SHAFT-55	
15	890-051C	BUSHING 2 1/4 OD X 2 ID X 2 LG	
16	890-005C	BUSHING CYL 1 1/4 X 1 X 1	
17	802-224C	HHCS 1/4-20X1 1/4 GR5	S/N 546558+
18	816-504C	MANUAL STORAGE CONTAINER	S/N 546558+
19	804-007C	WASHER FLAT 1/4 SAE PLT	S/N 546558+
20	803-255C	NUT HEX NYLOCK 1/4-20	S/N 546558+
21	827-108C	BSHG, 1.265ODX1.015IDX 81L	Cat. 3 to Cat. 2 (Optional) S/N 793188-
22	300-236D	HITCH PIN CAT. II & III	S/N 756953+
23	805-103C	PIN LINCH 7/16 X 1 3/4	S/N 756953+
24	890-850C	BUSHING 1 1/4X1X5/8	S/N 793189+

Main Frame Components RBT40 Series (S/N _____-)

Applies to Models: RBT40108, RBT4084, RBT4096

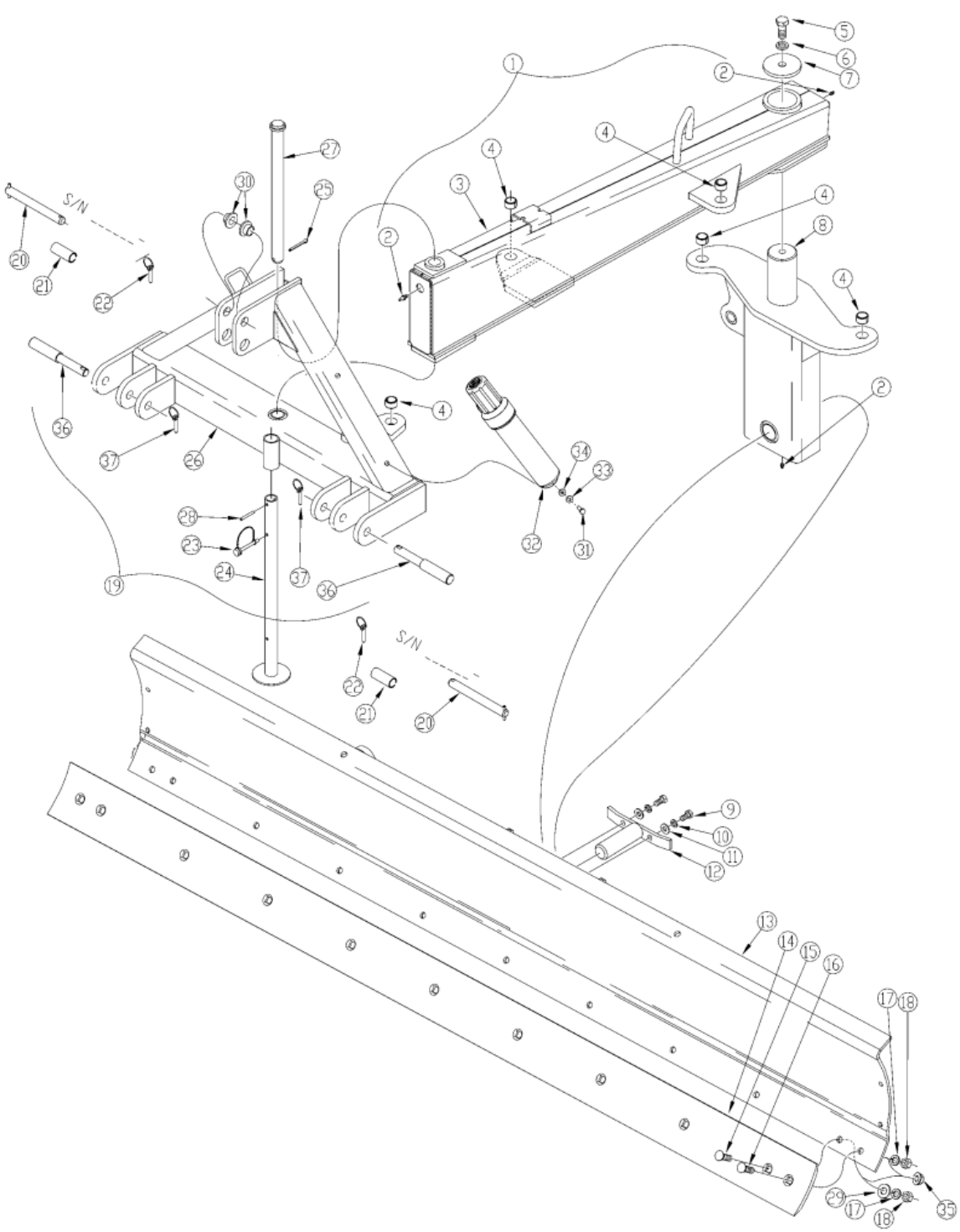

Main Frame Components RBT40 Series (S/N _____-)

Applies to Models: RBT40108, RBT4084, RBT4096

Ref.	Part No.	Part Description	Comments
	DWG 17685	Drawing Image Number	
1	300-175A	40 FRAME ASSEMBLY	
2	800-080C	GREASE ZERK 1/4-28 THD FORMING	
3	300-173H	40 FRAME WELDMENT	
3	300-173H81	40 FRAME WELDMENT GREEN	
3	300-173H82	40 FRAME WELDMENT ORANGE	
3	300-173H83	40 FRAME WELDMENT RED	
4	890-143C	BUSHING HARDENED 1 1/4-1-3/4 L	
5	802-292C	HHCS 3/4-16X1 3/4 GR5	
6	804-023C	WASHER LOCK SPRING 3/4 PLT	
7	301-240D	40 PIVOT CAP	
8	301-232H	T40 PIVOT WELDMENT	(S/N 294192+) Rev. 2 not compat. w/Rev. 1
8	301-232H81	T40 PIVOT WELDMENT GREEN	(S/N 294192+) Rev. 2 not compat. w/Rev. 1
8	301-232H82	RPBY 301-232H	(S/N 294192+) Rev. 2 not compat. w/Rev. 1
8	301-232H83	T40 PIVOT WELDMENT RED	(S/N 294192+) Rev. 2 not compat. w/Rev. 1
8	301-195H	40 PIVOT WELDMENT	(S/N 294191-) Rev. 1
9	802-240C	HHCS 1/2-20X1 GR5	
10	804-015C	WASHER LOCK SPRING 1/2 PLT	
11	804-016C	WASHER FLAT 1/2 SAE PLT	(S/N 269363+)
12	301-659V	T40/45 TILT PIN ASM	
12	301-215H	RPBY 301-659V	Obsolete (S/N 354767+) Rev. 3 not compat. w/Rev. 2
12	301-228H	RPBY 301-215H	(S/N 294192+) Rev. 2 not compat. w/Rev. 1
12	301-197H	40 TILT PIN WELDMENT	(S/N 294191-) Rev. 1
13	301-326H	9' -40 T SERIES BLADE WLDMENT	(S/N _____+)
13	301-231H	RPBY 301-326H	Obsolete (S/N 294192 to S/N _____) Rev. 2 not compat. w/Rev. 1
13	301-192H	9' MOLDBOARD WELDMENT	(S/N 294191-) Rev. 1
13	301-325H	8' -40 T SERIES BLADE WLDMENT	(S/N _____+)
13	301-230H	RPBY 301-325H	Obsolete (S/N 294192 to S/N _____) Rev. 2 not compat. w/Rev. 1
13	301-193H	8' MOLDBOARD WELDMENT	(S/N 294191-) Rev. 1
13	301-324H	7' -40 T SERIES BLADE WLDMENT	(S/N 633692+)
13	301-229H	RPBY 301-324H	Obsolete (S/N 294192 to S/N 633691) Rev. 2 not compat. w/Rev. 1
13	301-194H	7' MOLDBOARD WELDMENT	(S/N 294191-) Rev. 1
14	820-072C	GRADER BLADE 1/2 X 6 X 107 1/2	
14	820-035C	GRADER BLADE 1/2 X 6 X 95 1/2	
14	820-046C	GRADER BLADE 1/2 X 6 X 83 1/2	
15	802-288C	PLOW 5/8-11X2 GR5	
16	802-206C	PLOW 5/8-11X1 3/4 GR5	
17	804-022C	WASHER LOCK SPRING 5/8 PLT	Replaced By #35
18	803-021C	NUT HEX 5/8-11 PLT	Replaced By #35
19	300-174A	40 HITCH ASSEMBLY	
20	305-067S	LOWER HITCH PIN ASSY	S/N _____-
21	300-296D	BSH 1-1/8X7/8X2-3/4	S/N _____-
22	805-015C	PIN LINCH 5/16 X 1 3/4	S/N _____-
23	805-065C	PIN WIRE RETAINING 1/4 X 1 3/4	
24	300-171H	SPRT STND LR&RB15/25/35	
25	805-021C	PIN COTTER 1/4 X 2 PLT	
26	300-172H	40 HITCH WELDMENT	
26	300-172H81	40 HITCH WELDMENT GREEN	
26	300-172H82	40 HITCH WELDMENT ORANGE	
26	300-172H83	40 HITCH WELDMENT RED	

This Page Intentionally Left Blank

Main Frame Components RBT40 Series (S/N _____-)

Ref.	Part No.	Part Description	Comments
27	300-177H	40 FRONT PIVOT SHAFT WELDMENT	
28	805-177C	PIN ROLL 5/16 X 1 3/4 PLT	
29	804-021C	WASHER FLAT 5/8 SAE PLT	Replaced By #35
30	827-071C	BUSHING STEP 1.25ODX.765IDX.70	Cat. 2 to Cat. 1 (Optional)
31	802-283C	HHCS 1/4-20X1/2 GR2	S/N _____+
32	816-504C	MANUAL STORAGE CONTAINER	S/N _____+
33	804-006C	WASHER LOCK SPRING 1/4 PLT	S/N _____+
34	804-007C	WASHER FLAT 1/4 SAE PLT	S/N _____+
35	803-304C	NUT HEX WHIZ 5/8-11 PLT	S/N 815206+
35	803-263C	NUT HEX FLANGE LOCK 5/8-11 PLT	S/N 815205-
36	805-433C	PIN HTCH C1-C2 8.0 L	S/N _____+
37	805-103C	PIN LINCH 7/16 X 1 3/4	S/N _____+

Main Frame Components RBT45 Series (S/N _____-)

Applies to Models: RBT45108, RBT4596

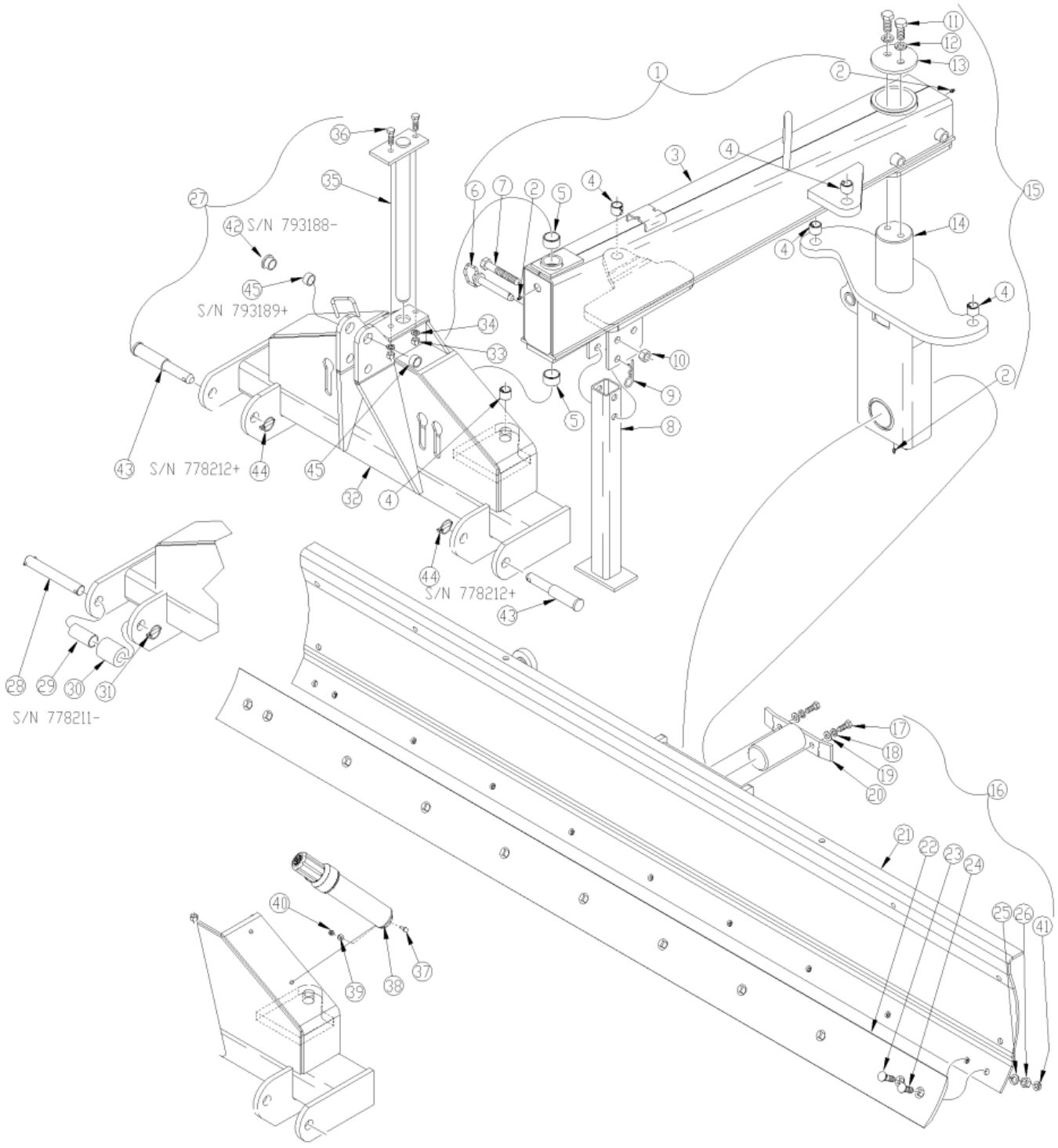

Main Frame Components RBT45 Series (S/N _____-)

Applies to Models: RBT45108, RBT4596

Ref.	Part No.	Part Description	Comments
	DWG 18898	Drawing Image Number	
1	300-190A	T45 FRAME ASSEMBLY	
2	800-080C	GREASE ZERK 1/4-28 THD FORMING	
3	300-192H	T45 FRAME WELDMENT	
3	300-192H81	T45 FRAME WELDMENT GREEN	
3	300-192H82	T45 FRAME WELDMENT ORANGE	
3	300-192H83	T45 FRAME WELDMENT RED	S/N 898816+
4	890-005C	BUSHING CYL 1 1/4 X 1 X 1	
5	890-126C	BUSHING PIVOT PIN 1 1/2 ID	
6	805-081C	PIN HTCH .75X4.25 USBL W/PIN	
7	802-192C	HHCS 3/4-10X4 1/2 GR5	
8	300-208H	T45 PARK STAND WELDMENT	
9	805-088C	PIN, HAIR COTTER 3/16 WIRE DIA	
10	803-026C	NUT LOCK 3/4-10 PLT	
11	802-292C	HHCS 3/4-16X1 3/4 GR5	
12	804-023C	WASHER LOCK SPRING 3/4 PLT	
13	301-209D	PIVOT CAP	
14	301-212H	T45 PIVOT WELDMENT	
15	301-209A	T45 PIVOT ASSEMBLY	
16	301-210A	9' T45 MOLDBOARD ASSEMBLY	
16	301-211A	8' T45 MOLDBOARD ASSEMBLY	
17	802-326C	HHCS 1/2-20X1 1/4 GR5	
18	804-015C	WASHER LOCK SPRING 1/2 PLT	
19	804-016C	WASHER FLAT 1/2 SAE PLT	
20	301-659V	T40/45 TILT PIN ASM	
20	301-215H	RPBY 301-659V	Obsolete
21	301-328H	9' -45 T SERIES BLADE WLDMENT	S/N 633882+
21	301-213H	RPBY 301-328H	(Obsolete) S/N 633881-
21	301-327H	8' -45 T SERIES BLADE WLDMENT	S/N 633882+
21	301-214H	RPBY 301-327H	(Obsolete) S/N 633881-
22	820-072C	GRADER BLADE 1/2 X 6 X 107 1/2	
22	820-035C	GRADER BLADE 1/2 X 6 X 95 1/2	
23	802-288C	PLOW 5/8-11X2 GR5	
24	802-206C	PLOW 5/8-11X1 3/4 GR5	
25	804-022C	WASHER LOCK SPRING 5/8 PLT	Replaced By #41
26	803-021C	NUT HEX 5/8-11 PLT	Replaced By #41
27	300-189A	T45 HITCH ASSEMBLY	
28	300-202S	PIN 1 1/8 OD X 7 1/8 USABLE	S/N 778211-
29	300-429D	CAT III BUSHING	S/N 778211-
30	300-431D	TUBE RD 2 1/4ODX1 5/32IDX2 5/8	S/N 778211-
31	805-015C	PIN LINCH 5/16 X 1 3/4	S/N 778211-
32	300-191H	T45 HITCH WELDMENT	
32	300-191H81	T45 HITCH WELDMENT GREEN	
32	300-191H82	T45 HITCH WELDMENT ORANGE	
32	300-191H83	T45 HITCH WELDMENT RED	S/N 898816+
33	803-020C	NUT HEX 1/2-13 PLT	
34	804-015C	WASHER LOCK SPRING 1/2 PLT	
35	300-201H	T45 FRONT PIVOT SHAFT WELDMENT	
36	802-091C	HHCS 1/2-13X1 1/2 GR5	
37	802-224C	HHCS 1/4-20X1 1/4 GR5	S/N 546558+

This Page Intentionally Left Blank

Main Frame Components RBT45 Series (S/N _____-)

Ref.	Part No.	Part Description	Comments
38	816-504C	MANUAL STORAGE CONTAINER	S/N 546558+
39	804-007C	WASHER FLAT 1/4 SAE PLT	S/N 546558+
40	803-255C	NUT HEX NYLOCK 1/4-20	S/N 546558+
41	803-304C	NUT HEX WHIZ 5/8-11 PLT	S/N 815206+
41	803-263C	NUT HEX FLANGE LOCK 5/8-11 PLT	S/N 815205-
42	827-108C	BSHG, 1.265ODX1.015IDX.81L	Cat. 3 to Cat. 2 (Optional) S/N 793188-
43	300-236D	HITCH PIN CAT. II & III	S/N 778212+
44	805-103C	PIN LINCH 7/16 X 1 3/4	S/N 778212+
45	890-850C	BUSHING 1 1/4X1X5/8	S/N 793189+

Main Frame Components RBT40 Series (S/N _____+)

Applies to Models: RBT40108, RBT4084, RBT4096

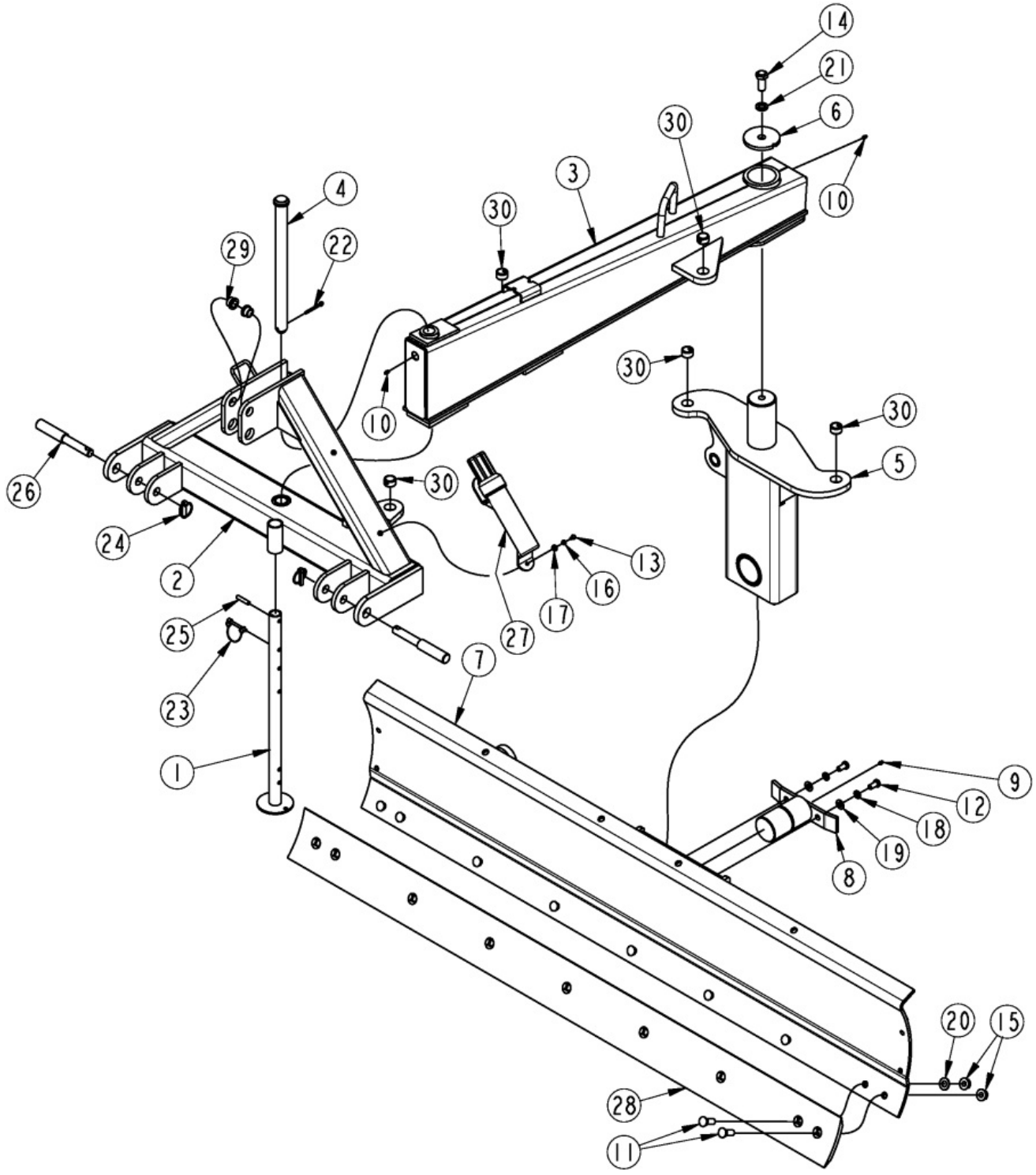

Main Frame Components RBT40 Series (S/N _____+)

Applies to Models: RBT40108, RBT4084, RBT4096

Ref.	Part No.	Part Description	Comments
	DWG 72017	Image No.	
1	300-171H	SPRT STND LR&RB15/25/35	
2	300-172H	40 HITCH WELDMENT	
2	300-172H81	40 HITCH WELDMENT GREEN	Green
2	300-172H82	40 HITCH WELDMENT ORANGE	Orange
2	300-172H83	40 HITCH WELDMENT RED	Red
3	300-173H	40 FRAME WELDMENT	
3	300-173H81	40 FRAME WELDMENT GREEN	Green
3	300-173H82	40 FRAME WELDMENT ORANGE	Orange
3	300-173H83	40 FRAME WELDMENT RED	Red
4	300-177H	40 FRONT PIVOT SHAFT WELDMENT	
5	301-232H	T40 PIVOT WELDMENT	
5	301-232H81	T40 PIVOT WELDMENT GREEN	Green
5	301-232H82	RPBY 301-232H	Orange
5	301-232H83	T40 PIVOT WELDMENT RED	Red
6	301-240D	40 PIVOT CAP	
7	301-324H	7' -40 T SERIES BLADE WLDMENT	
8	301-658H	T40/45 TILT PIN WELDMENT	
9	800-001C	GREASE ZERK STRAIGHT 1/4-28	
10	800-080C	GREASE ZERK 1/4-28 THD FORMING	
11	802-206C	PLOW 5/8-11X1 3/4 GR5	
12	802-240C	HHCS 1/2-20X1 GR5	
13	802-283C	HHCS 1/4-20X1/2 GR2	
14	802-292C	HHCS 3/4-16X1 3/4 GR5	
15	803-304C	NUT HEX WHIZ 5/8-11 PLT	
16	804-006C	WASHER LOCK SPRING 1/4 PLT	
17	804-007C	WASHER FLAT 1/4 SAE PLT	
18	804-015C	WASHER LOCK SPRING 1/2 PLT	
19	804-016C	WASHER FLAT 1/2 SAE PLT	
20	804-021C	WASHER FLAT 5/8 SAE PLT	
21	804-023C	WASHER LOCK SPRING 3/4 PLT	
22	805-021C	PIN COTTER 1/4 X 2 PLT	
23	805-065C	PIN WIRE RETAINING 1/4 X 1 3/4	
24	805-103C	PIN LINCH 7/16 X 1 3/4	
25	805-161C	PIN ROLL 3/8 X 1 3/4 LG PLT	
26	805-433C	PIN HTCH C1-C2 8.0 L	
27	816-504C	MANUAL STORAGE CONTAINER	
28	820-046C	GRADER BLADE 1/2 X 6 X 83 1/2	
29	827-071C	BUSHING STEP 1.25ODX.765IDX.70	Cat. 2 to Cat. 1 (Optional)
30	890-143C	BUSHING HARDENED 1 1/4-1-3/4 L	

Main Frame Components RBT45 Series (S/N _____+)

Applies to Models: RBT45108, RBT4596

Main Frame Components RBT45 Series (S/N _____+)

Applies to Models: RBT45108, RBT4596

Ref.	Part No.	Part Description	Comments
	DWG 72019	Image No.	
1	300-191H	T45 HITCH WELDMENT	
1	300-191H81	T45 HITCH WELDMENT GREEN	Green
1	300-191H82	T45 HITCH WELDMENT ORANGE	Orange
1	300-191H83	T45 HITCH WELDMENT RED	Red
2	300-192H	T45 FRAME WELDMENT	
2	300-192H81	T45 FRAME WELDMENT GREEN	Green
2	300-192H82	T45 FRAME WELDMENT ORANGE	Orange
2	300-192H83	T45 FRAME WELDMENT RED	Red
3	300-201H	T45 FRONT PIVOT SHAFT WELDMENT	
4	300-208H	T45 PARK STAND WELDMENT	
5	300-236D	HITCH PIN CAT. II & III	
6	301-209D	PIVOT CAP	
7	301-212H	T45 PIVOT WELDMENT	
8	301-328H	9' -45 T SERIES BLADE WLDMENT	
9	301-658H	T40/45 TILT PIN WELDMENT	
10	326-095S	MANUAL CONTAINER KIT, 1 1/4	
11	800-001C	GREASE ZERK STRAIGHT 1/4-28	
12	800-080C	GREASE ZERK 1/4-28 THD FORMING	
13	802-091C	HHCS 1/2-13X1 1/2 GR5	
14	802-192C	HHCS 3/4-10X4 1/2 GR5	
15	802-206C	PLOW 5/8-11X1 3/4 GR5	
16	802-292C	HHCS 3/4-16X1 3/4 GR5	
17	802-326C	HHCS 1/2-20X1 1/4 GR5	
18	803-020C	NUT HEX 1/2-13 PLT	
19	803-026C	NUT LOCK 3/4-10 PLT	
20	803-304C	NUT HEX WHIZ 5/8-11 PLT	
21	804-015C	WASHER LOCK SPRING 1/2 PLT	
22	804-016C	WASHER FLAT 1/2 SAE PLT	
23	804-023C	WASHER LOCK SPRING 3/4 PLT	
24	805-081C	PIN HTCH .75X4.25 USBL W/PIN	
25	805-088C	PIN, HAIR COTTER 3/16 WIRE DIA	
26	805-103C	PIN LINCH 7/16 X 1 3/4	
27	820-072C	GRADER BLADE 1/2 X 6 X 107 1/2	
28	890-005C	BUSHING CYL 1 1/4 X 1 X 1	
29	890-126C	BUSHING PIVOT PIN 1 1/2 ID	
30	890-850C	BUSHING 1 1/4X1X5/8	

Manual Offset, Angling And Tilt RBT40 Series

Applies to Models: RBT40108, RBT4084, RBT4096

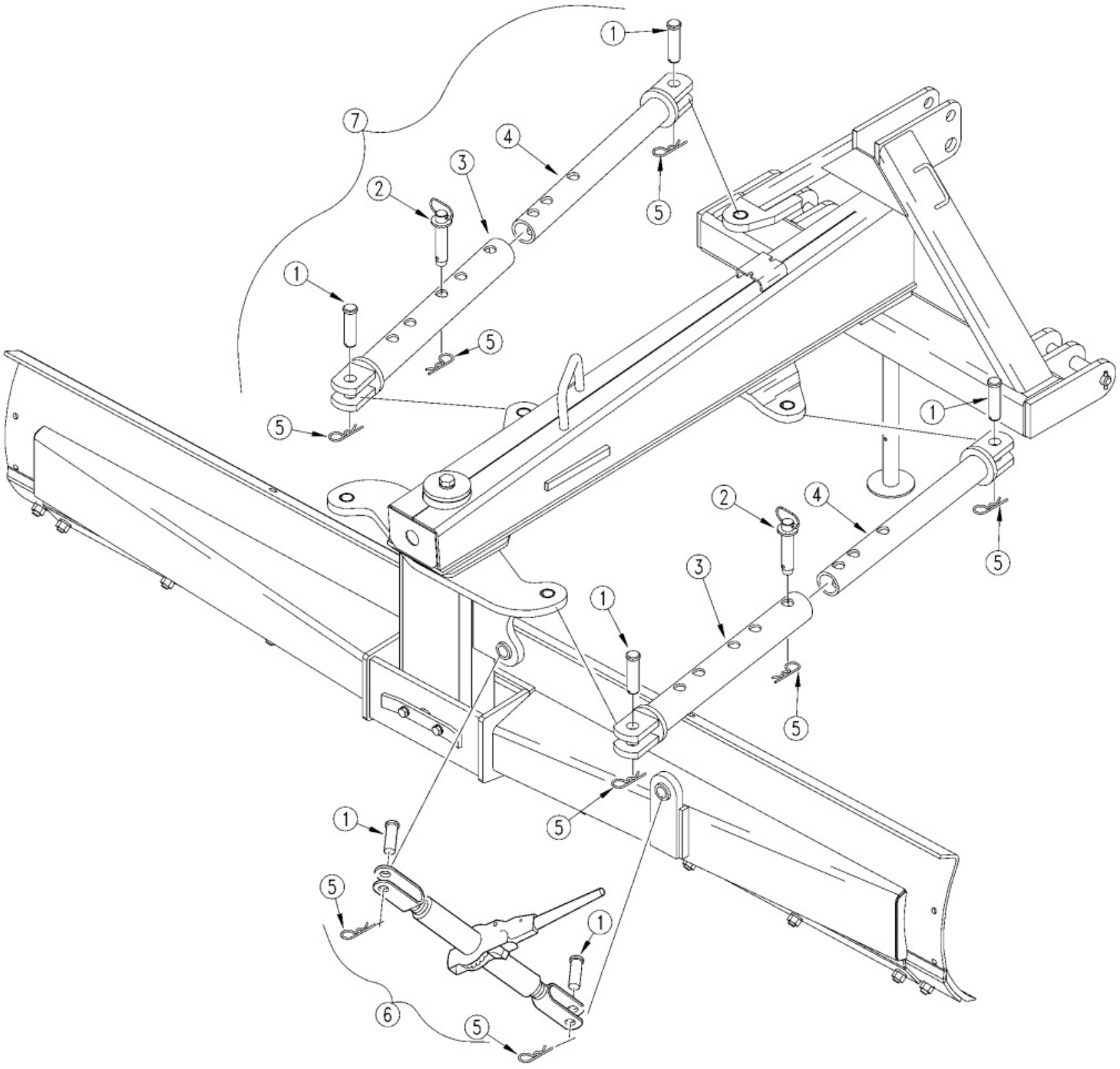

Manual Offset, Angling And Tilt RBT40 Series

Applies to Models: RBT40108, RBT4084, RBT4096

Ref.	Part No.	Part Description	Comments
	DWG17683	Drawing Image Number	
1	805-090C	PIN CLVS 1.0X3.20 USBL	
2	805-007C	PIN HTCH 1.0X3.38 USBL W/PIN	
3	300-184H	40 LINK, MANUAL WELD.-FEMALE	
4	300-146H	LINK, MANUAL WELDMENT-MALE	
5	805-088C	PIN, HAIR COTTER 3/16 WIRE DIA	
6	890-637C	RATCHET JACK 16.25 - 22.25	
7	300-182A	40 MAN OFFSET & ANGL LINK ASSY	

Manual Offset, Angling And Tilt RBT45 Series

Applies to Models: RBT45108, RBT4596

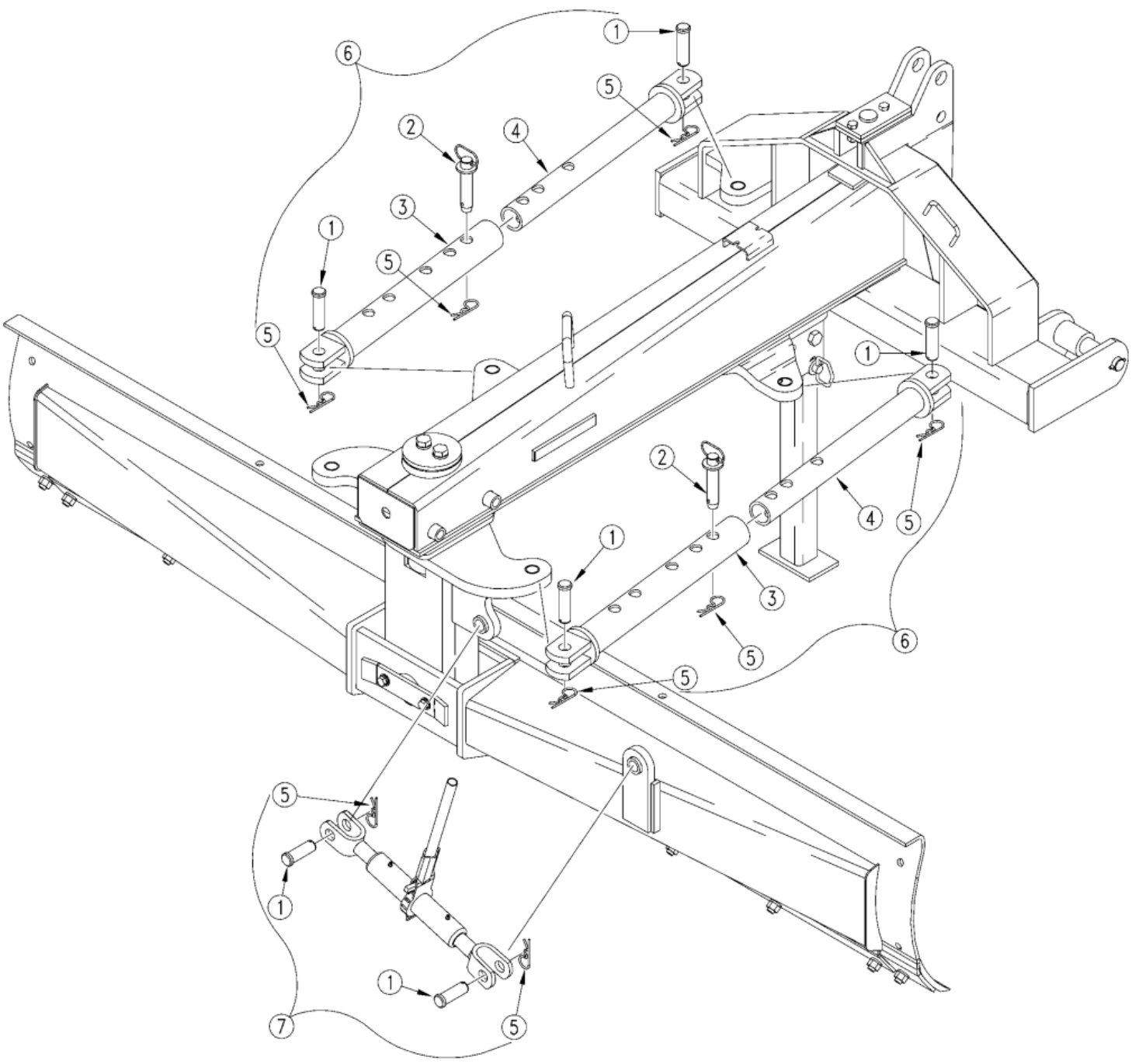

Manual Offset, Angling And Tilt RBT45 Series

Applies to Models: RBT45108, RBT4596

Ref.	Part No.	Part Description	Comments
	DWG 18899	Drawing Image Number	
1	805-090C	PIN CLVS 1.0X3.20 USBL	
2	805-007C	PIN HTCH 1.0X3.38 USBL W/PIN	
3	300-207H	T45 LINK, MANUAL WELD.-FEMALE	
4	300-146H	LINK, MANUAL WELDMENT-MALE	
5	805-088C	PIN, HAIR COTTER 3/16 WIRE DIA	
6	300-206A	T45 MAN OFFSET & ANGL LINK ASM	
7	890-637C	RATCHET JACK 16.25 - 22.25	

Hydraulic Cylinder (810-126C) Cross S/N 1323732-

Applies to Models: RBT40108, RBT4084, RBT4096

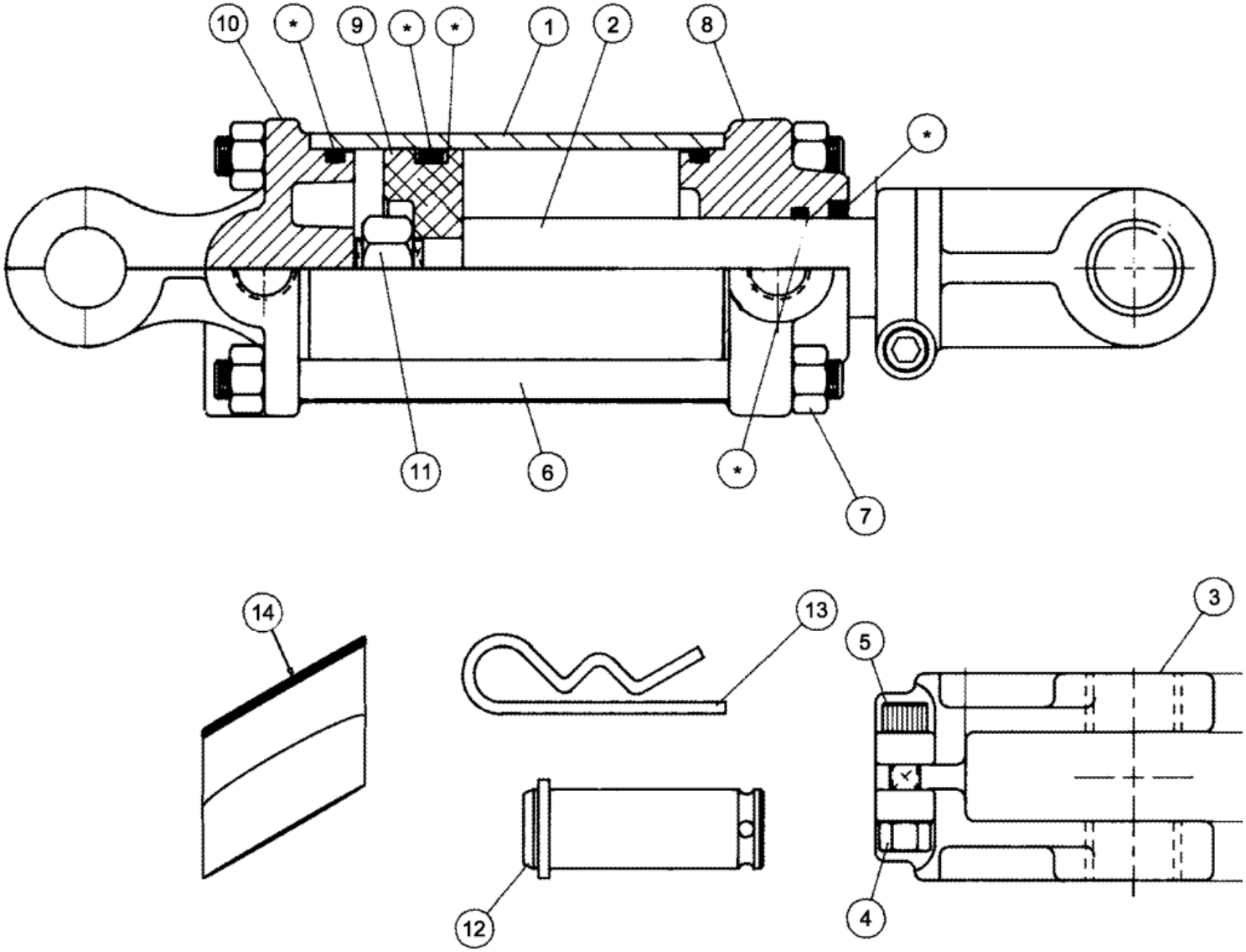

Hydraulic Cylinder (810-126C) Cross S/N 1323732-

Applies to Models: RBT40108, RBT4084, RBT4096

Ref.	Part No.	Part Description	Comments
	DWG 74772	Image No.	
	810-126C	CYL 3.5X16X1.25 ROD (TIE ROD) *	Complete assembly (2,500 PSI)
1	1D0009-1850	TUBE CROSS	
2	1D0205-2062	ROD CROSS	
3	3C4549	CROSS ROD CLEVIS	
4	2A0235-6	CROSS NUT, CLEVIS & TIE ROD	
5	2A0079-616	CROSS SCREW, CAP	
6	2A0581-2125	TIE ROD CROSS	
7	2A0236-9	TIE ROD NUT CROSS	
8	1D1159-7	HEAD CROSS	
9	1D1401-350	PISTON CROSS	
10	1D1207-7	BASE CROSS	
11	1A1141	PISTON NUT CROSS	
12	1D1582-16300	CROSS CLEVIS PIN	
13	805-032C	PIN HAIR COTTER .148 WIRE	
14	810-146C	SEAL KIT CROSS 3.5 CYL 1C4429	Round Cut Seals

Hydraulic Cylinder (810-126C) Cross S/N 1323733+

Applies to Models: RBT40108, RBT4084, RBT4096

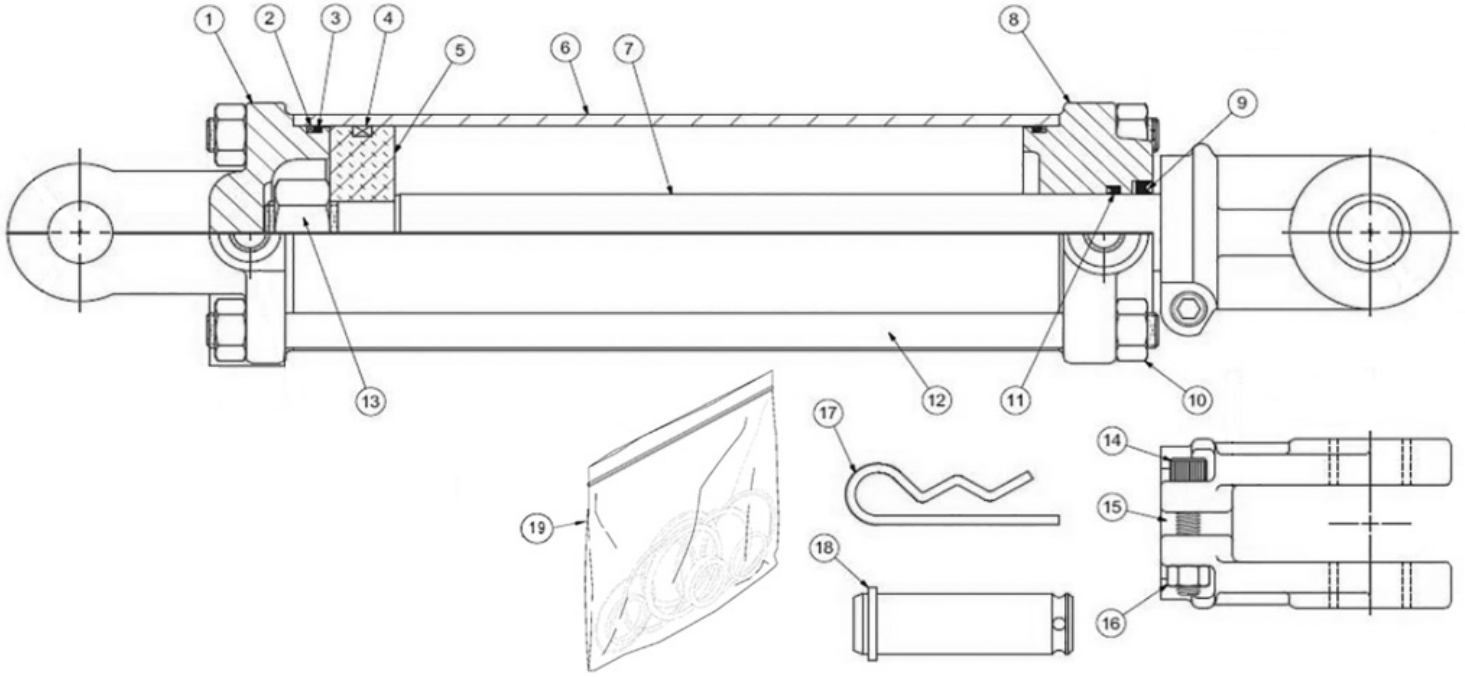

Hydraulic Cylinder (810-126C) Cross S/N 1323733+

Applies to Models: RBT40108, RBT4084, RBT4096

Ref.	Part No.	Part Description	Comments
	DWG 72933	Image No.	
	810-126C	CYL 3.5X16X1.25 ROD (TIE ROD) *	Complete assembly (3,000 PSI)
1	4C7389	CROSS BASE CLEVIS	
2	N/A	NOT AVAILABLE	Only available in seal kit item #19
3	N/A	NOT AVAILABLE	Only available in seal kit item #19
4	N/A	NOT AVAILABLE	Only available in seal kit item #19
5	4C4368	CROSS PISTON	
6	1D0009-1812	CROSS TUBE	
7	4C7390	CROSS ROD	
8	4C7391	CROSS HEAD	
9	N/A	NOT AVAILABLE	Only available in seal kit item #19
10	2A0236-9	TIE ROD NUT CROSS	
11	N/A	NOT AVAILABLE	Only available in seal kit item #19
12	2A0581-2100	CROSS TIE ROD	
13	2A0246-16	NUT CROSS	
14	2A0079-616	CROSS SCREW, CAP	
15	3C4549	CROSS ROD CLEVIS	
16	2A0235-6	CROSS NUT, CLEVIS & TIE ROD	
17	805-032C	PIN HAIR COTTER .148 WIRE	
18	1D1582-16300	CROSS CLEVIS PIN	
19	850-356C	CROSS SEAL KIT	Square cut seals

Hydraulic Cylinder (810-126C) Midway

Applies to Models: RBT40108, RBT4084, RBT4096

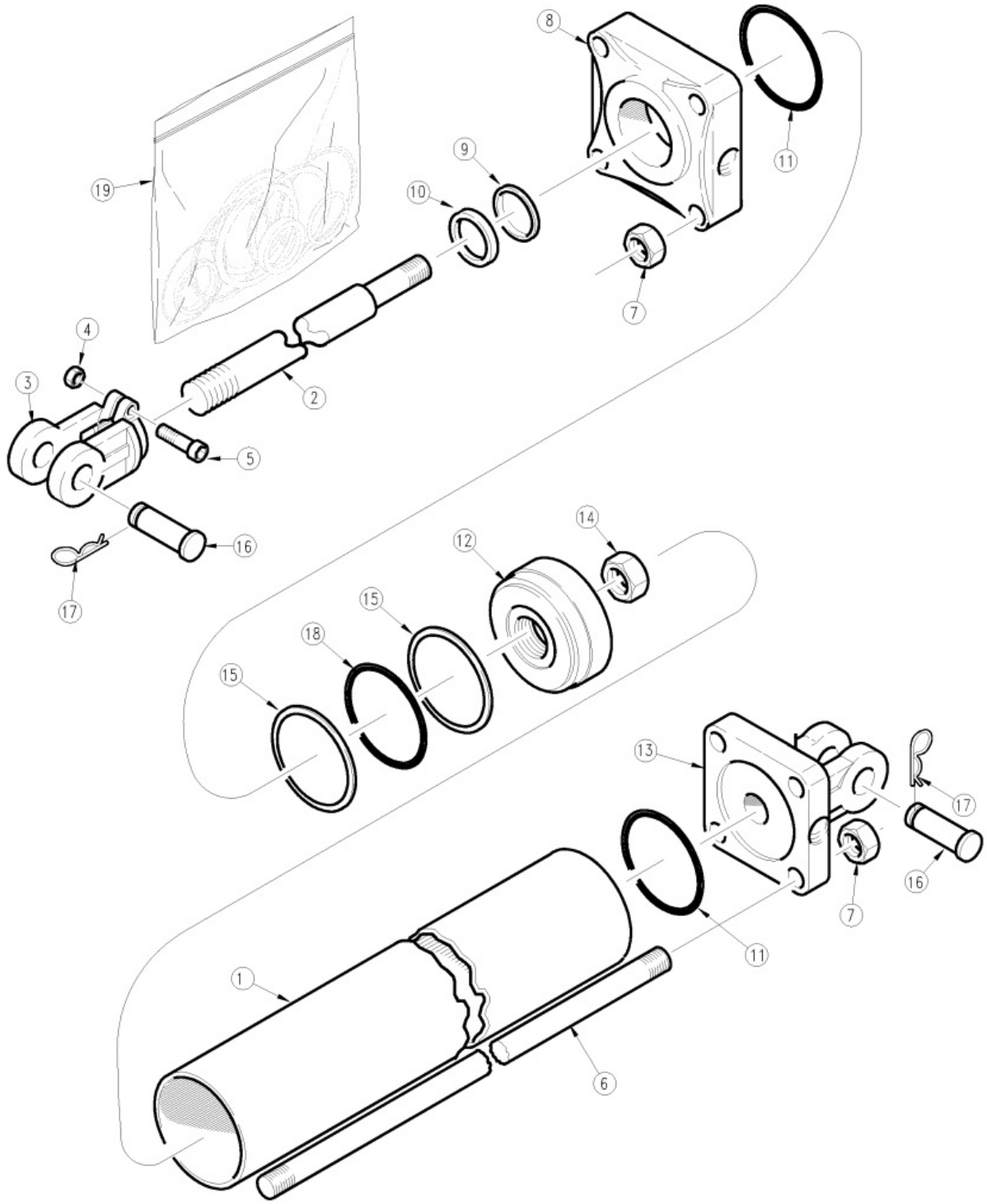

Hydraulic Cylinder (810-126C) Midway

Applies to Models: RBT40108, RBT4084, RBT4096

Ref.	Part No.	Part Description	Comments
	DWG 78259	Drawing Image Number	
	810-126C	CYL 3.5X16X1.25 ROD (TIE ROD) *	Complete assembly
1	5M5124	MW TUBE 3-1/2 X 16 CYLINDER	
2	2M5422	MW ROD 1-1/4 DIA X 16 STROKE	
3	1M6010-ADI	MIDWAY HARDENED CLEVIS ADI	
3	1M6010	RPBY 1M6010-ADI	Obsolete
4	803-234C	NUT HEX 3/8-16 PLAIN	
4	2A0012	RPBY 803-234C	Obsolete
5	802-023C	HHCS 3/8-16X1 3/4 GR5	
5	2A0006	RPBY 802-023C	Obsolete
6	7M5324	MW TIE ROD	
7	2A0016	MW TIE ROD NUT	
8	3R3410	MW HEAD	
8	3M5410	RPBY 3R3410	Obsolete
9	N/A	NOT AVAILABLE	Only available in seal kit #19
10	N/A	NOT AVAILABLE	Only available in seal kit #19
11	N/A	NOT AVAILABLE	Only available in seal kit #19
12	4M5108	MW PISTON	Obsolete
12	4M5102	RPBY 4M5108	Obsolete
13	6R3150-ADI	MIDWAY ADI BASE	
13	6R3150	RPBY 6R3150-ADI	Obsolete
13	6M5150	RPBY 6R3150	Obsolete
14	2A0024	MW PISTON NUT 1-14	
15	N/A	NOT AVAILABLE	Only available in seal kit #19
16	805-124C	PIN CLVS 1.0X3.69 USBL GR5	
16	2A0208	RPBY 805-124C	Obsolete
17	2A0132	MW PIN CLIP	
18	N/A	NOT AVAILABLE	Only available in seal kit #19
19	810-149C	SEAL KIT MW (5A5102) 3.5X1.25R	
19	3A5102	RPBY 810-149C	Obsolete

Hydraulic Cylinder (810-195C) Cross

Applies to Models: RBT45108, RBT4596, RBT55108, RBT55120, RBT5596

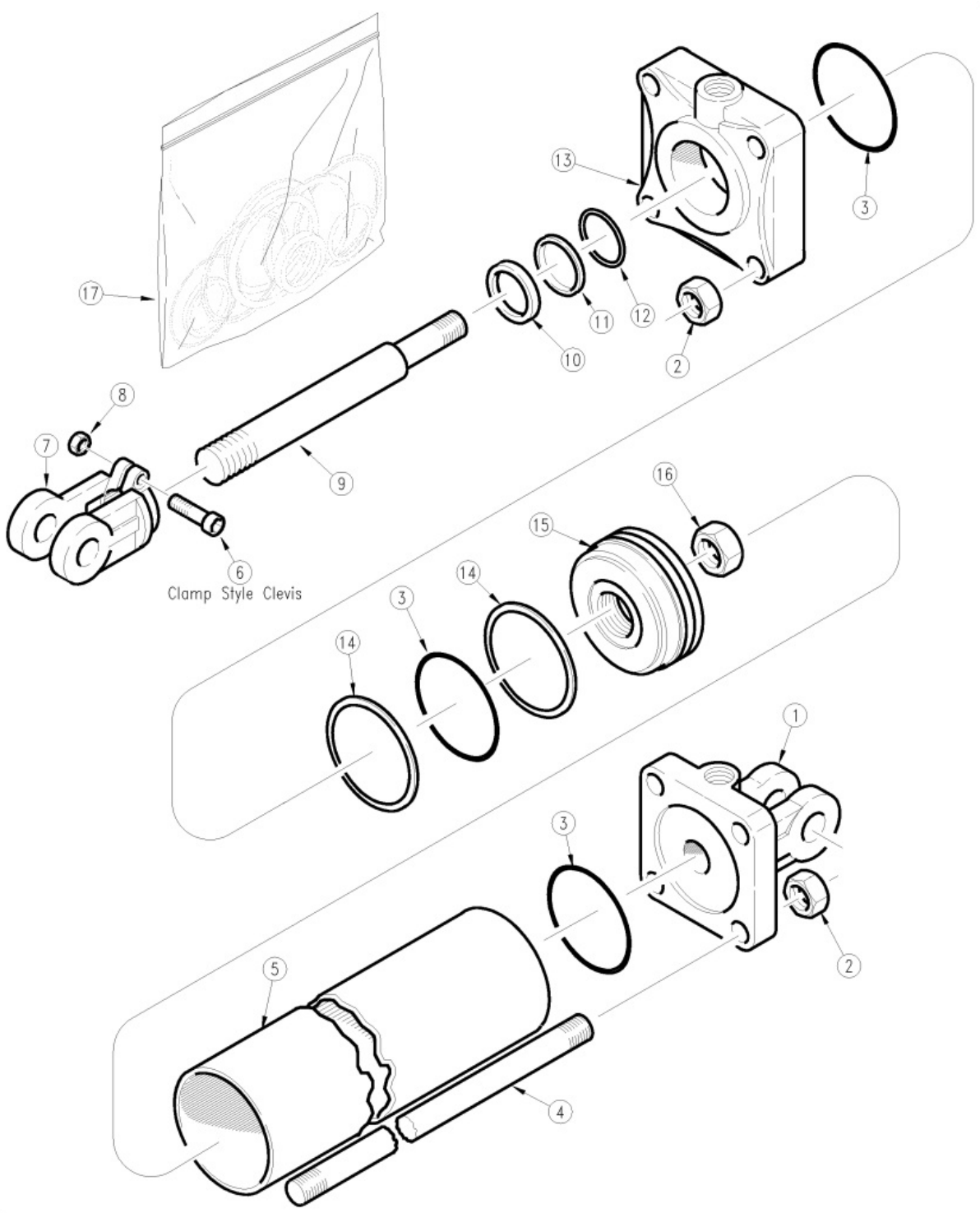

Hydraulic Cylinder (810-195C) Cross

Applies to Models: RBT45108, RBT4596, RBT55108, RBT55120, RBT5596

Ref.	Part No.	Part Description	Comments
	DWG 78277	Drawing Image Number	
	810-195C	CYL 3X8X1.25 ROD (TIE) NO PINS *	Complete assembly
1	1D1222-8	CROSS BASE 3 BORE CYLINDER	
2	2A0235-8	CROSS NUT, TIE ROD	
3	N/A	NOT AVAILABLE	Only available in seal kit #17
4	4C2566	CROSS TIE ROD	Long
4	2A0580-1300	CROSS TIE ROD	Short
5	1D0007-1050	CROSS TUBE 3 BORE	
6	2A0079-616	CROSS SCREW, CAP	
7	1D1003-5	CROSS ROD CLEVIS	
8	2A0235-6	CROSS NUT, CLEVIS & TIE ROD	
9	1D0206-1475	CROSS ROD	
10	N/A	NOT AVAILABLE	Only available in seal kit #17
11	N/A	NOT AVAILABLE	Only available in seal kit #17
12	N/A	NOT AVAILABLE	Only available in seal kit #17
13	1D1157-17	CROSS HEAD 3 BORE CYLINDER	
14	N/A	NOT AVAILABLE	Only available in seal kit #17
15	1D1401-300	CROSS PISTON 3 BORE CYLINDER	
16	2A0246-12	CROSS NUT, PISTON	
17	810-009C	CYL SEAL KIT 3 (CROSS)	
17	810-315C	RPBY 810-009C	Obsolete

Hydraulic Cylinder (810-195C) Midway

Applies to Models: RBT45108, RBT4596, RBT55108, RBT55120, RBT5596

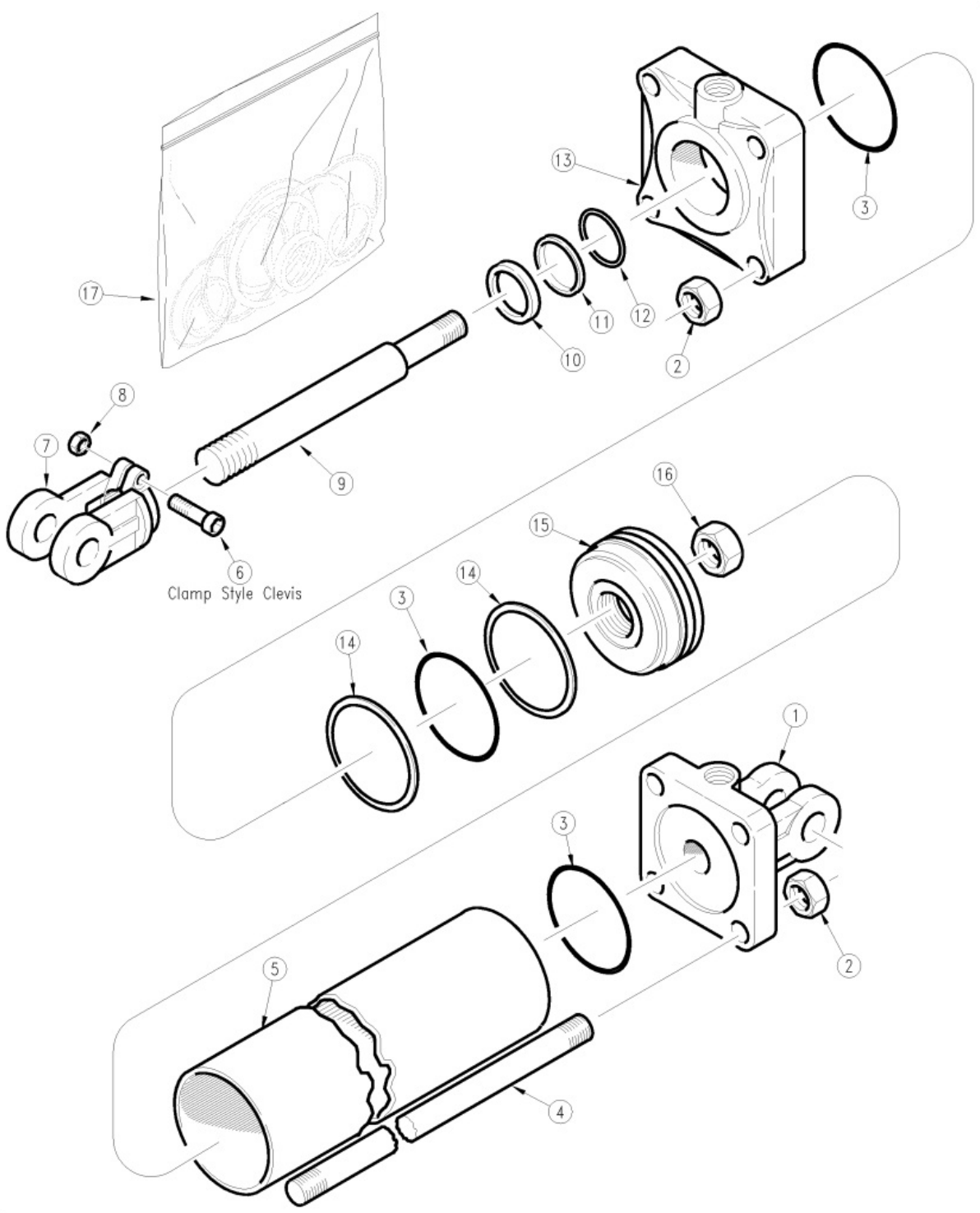

Hydraulic Cylinder (810-195C) Midway

Applies to Models: RBT45108, RBT4596, RBT55108, RBT55120, RBT5596

Ref.	Part No.	Part Description	Comments
	DWG 78278	Drawing Image Number	
	810-195C	CYL 3X8X1.25 ROD (TIE) NO PINS *	Complete assembly
1	6R1164-ADI	MIDWAY ADI BASE	
1	6R1164	RPBY 6R1164-ADI	Obsolete
1	6M4166	RPBY 6R1164	Obsolete
2	2A0014	MW TIE ROD NUT	
3	N/A	NOT AVAILABLE	Only available in seal kit #17
4	7M4316	MW TIE ROD 3 X 8 CYLINDER	
5	5M4116	MW TUBE 3 X 8 CYLINDER	
6	802-023C	HHCS 3/8-16X1 3/4 GR5	
6	2A0006	RPBY 802-023C	Obsolete
7	1M6010-ADI	MIDWAY HARDENED CLEVIS ADI	
7	1M6010	RPBY 1M6010-ADI	Obsolete
8	803-234C	NUT HEX 3/8-16 PLAIN	
8	2A0012	RPBY 803-234C	Obsolete
9	2M4416	MW ROD 1 1/4 DIA	
10	N/A	NOT AVAILABLE	Only available in seal kit #17
11	N/A	NOT AVAILABLE	Only available in seal kit #17
12	N/A	NOT AVAILABLE	Only available in seal kit #17
13	3R1412	MW HEAD 3X1-1/4 ROD PT.E	
13	3M4412	RPBY 3R1412	Obsolete
14	N/A	NOT AVAILABLE	Only available in seal kit #17
15	4M4108	MW PISTON	
15	4M4104	RPBY 4M4108	Obsolete
16	2A0024	MW PISTON NUT 1-14	
17	810-015C	CYL SEAL KIT MW (5A4104) 3 X 7	
17	810-199C	RPBY 810-015C	Obsolete

Hydraulic Cylinder (810-213C) Midway

Applies to Models: RBT55108, RBT55120, RBT5596

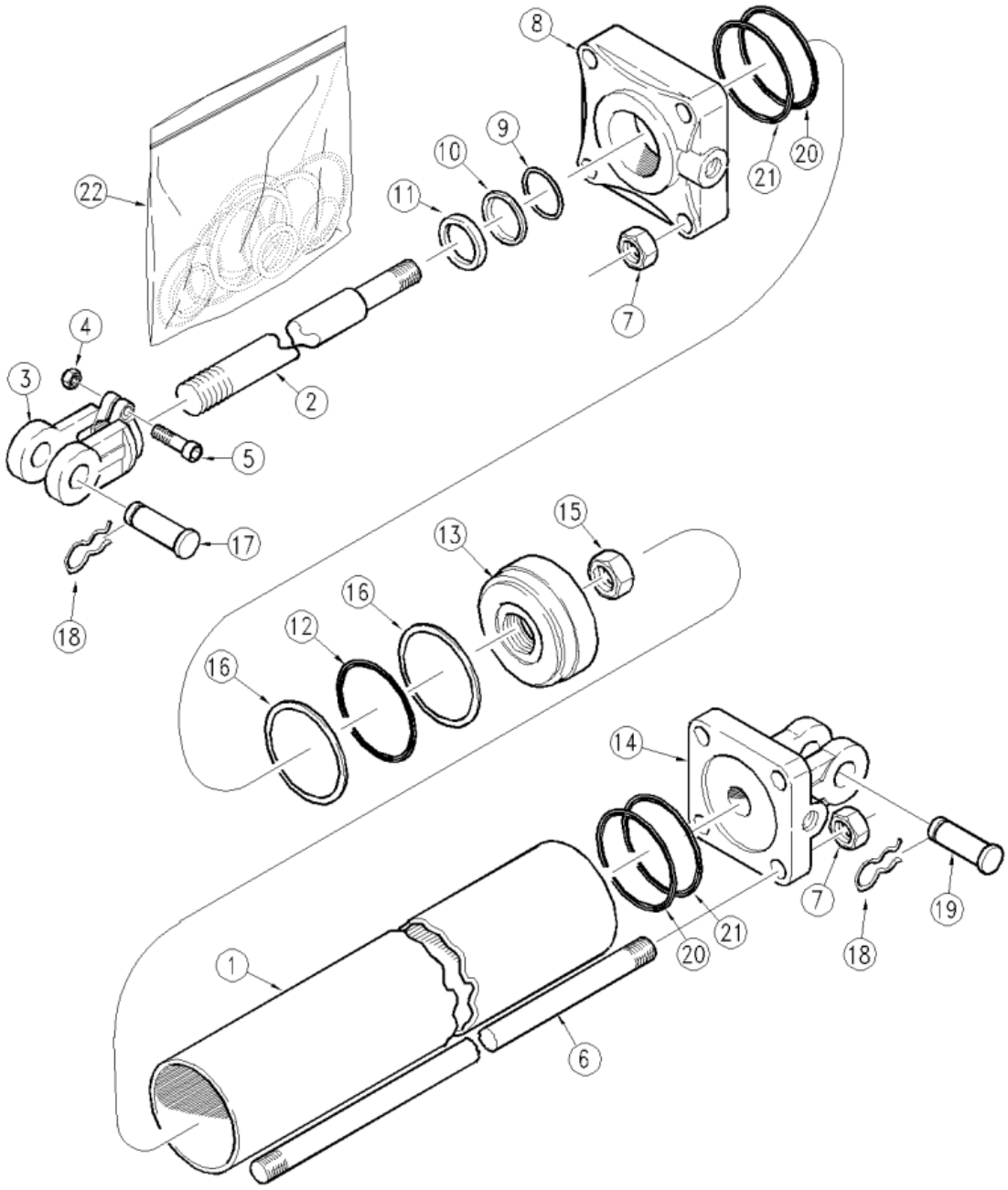

Hydraulic Cylinder (810-213C) Midway

Applies to Models: RBT55108, RBT55120, RBT5596

Ref.	Part No.	Part Description	Comments
	DWG 78281	Drawing Image Number	
	810-213C	RPBY 810-514C *	(Obsolete) Complete assembly
1	5M7524	MW TUBE	
2	2M7624	MW ROD	
3	1M7016-ADI	MIDWAY HARDENED CLEVIS ADI	
3	1M7016	RPBY 1M7016-ADI	Obsolete
4	803-234C	NUT HEX 3/8-16 PLAIN	
4	2A0012	RPBY 803-234C	Obsolete
5	802-023C	HHCS 3/8-16X1 3/4 GR5	
5	2A0006	RPBY 802-023C	Obsolete
6	7M7324	MW TIE ROD	
7	803-257C	NUT HEX 3/4-16 PLAIN	
7	2A0019	RPBY 803-257C	Obsolete
8	3R7612	MW HEAD 4.5 X 16 X 2	
9	N/A	NOT AVAILABLE	Only available in seal kit #22
10	N/A	NOT AVAILABLE	Only available in seal kit #22
11	N/A	NOT AVAILABLE	Only available in seal kit #22
12	N/A	NOT AVAILABLE	Only available in seal kit #22
13	4M7108	MW PISTON	
13	4M7102	RPBY 4M7108	Obsolete
14	6R7162-ADI	MIDWAY ADI BASE	
14	6R7162	RPBY 6R7162-ADI	Obsolete
15	2A0024	MW PISTON NUT 1-14	
16	N/A	NOT AVAILABLE	Only available in seal kit #22
17	805-124C	PIN CLVS 1.0X3.69 USBL GR5	
17	2A0208	RPBY 805-124C	Obsolete
18	2A0132	MW PIN CLIP	
19	2A0209	MW PIN CLEVIS BASE END	
20	N/A	NOT AVAILABLE	Only available in seal kit #22
21	N/A	NOT AVAILABLE	Only available in seal kit #22
22	810-236C	SEAL KIT MW 4.5 CYL 5A7116	

Hydraulic Cylinder (810-384C) Cross

Applies to Models: RBT45108, RBT4596, RBT40108, RBT4084, RBT4096

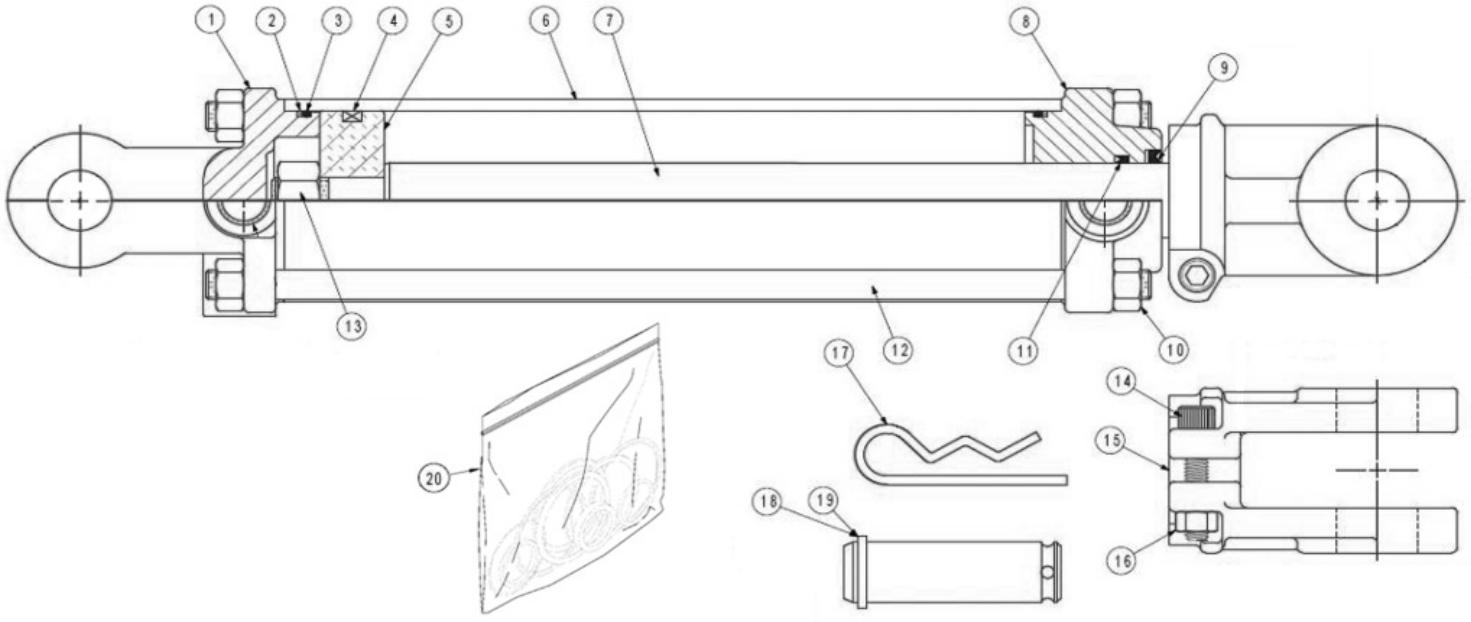

Hydraulic Cylinder (810-384C) Cross

Applies to Models: RBT45108, RBT4596, RBT40108, RBT4084, RBT4096

Ref.	Part No.	Part Description	Comments
	DWG 72940	Image No.	
	810-384C	RPBY 850-449C *	(2,500 PSI) Complete assembly
1	1D1205-8	CROSS, BASE CLEVIS	
2	N/A	NOT AVAILABLE	Only available in seal kit #20
3	N/A	NOT AVAILABLE	Only available in seal kit #20
4	N/A	NOT AVAILABLE	Only available in seal kit #20
5	1D1401-300	CROSS PISTON 3 BORE CYLINDER	
6	1D0007-850	CROSS, TUBE	
7	1D0206-1075	CROSS, ROD	
8	1D1157-17	CROSS HEAD 3 BORE CYLINDER	
9	N/A	NOT AVAILABLE	Only available in seal kit #20
10	2A0235-8	CROSS NUT, TIE ROD	
11	N/A	NOT AVAILABLE	Only available in seal kit #20
12	2A0580-1100	CROSS,TIE ROD	
13	2A0246-12	CROSS NUT, PISTON	
14	2A0079-616	CROSS SCREW, CAP	
15	1D1003-5	CROSS ROD CLEVIS	
16	2A0235-6	CROSS NUT, CLEVIS & TIE ROD	
17	805-032C	PIN HAIR COTTER .148 WIRE	
18	1D1551-16275	CROSS CLEVIS PIN 2.75"USABLE	
19	1D1551-16300	CROSS CLEVIS PIN 3"USABLE	
20	810-009C	CYL SEAL KIT 3 (CROSS)	

Hydraulic Cylinder (810-384C) Midway

Applies to Models: RBT45108, RBT4596, RBT40108, RBT4084, RBT4096

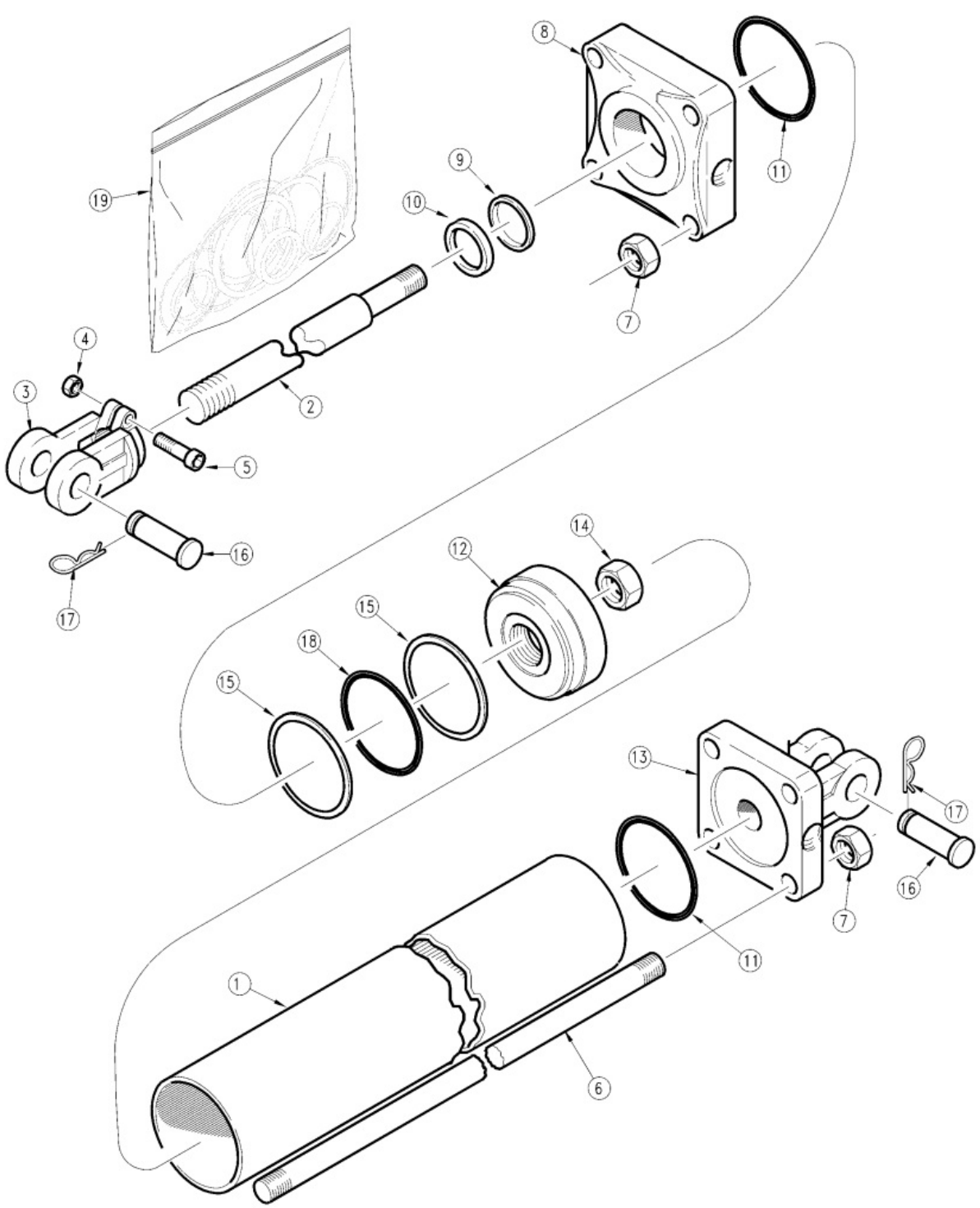

Hydraulic Cylinder (810-384C) Midway

Applies to Models: RBT45108, RBT4596, RBT40108, RBT4084, RBT4096

Ref.	Part No.	Part Description	Comments
	DWG 11717	Drawing Image Number	
	810-384C	RPBY 850-449C *	(Obsolete) Complete assembly
1	5M4110	MW TUBE 3 X 6 CYLINDER	
2	2M4410	MW ROD 1-1/4 DIA X 6 STROKE	
3	1M6010-ADI	MIDWAY HARDENED CLEVIS ADI	
3	1M6010	RPBY 1M6010-ADI	Obsolete
4	803-234C	NUT HEX 3/8-16 PLAIN	
4	2A0012	RPBY 803-234C	Obsolete
5	802-023C	HHCS 3/8-16X1 3/4 GR5	
5	2A0006	RPBY 802-023C	Obsolete
6	7M4310	MW TIE ROD 3 X 6 CYLINDER	
7	2A0014	MW TIE ROD NUT	
8	3R1412	MW HEAD 3X1-1/4 ROD PT.E	
8	3M4412	RPBY 3R1412	Obsolete
9	N/A	NOT AVAILABLE	Only available in seal kit #19
10	N/A	NOT AVAILABLE	Only available in seal kit #19
11	N/A	NOT AVAILABLE	Only available in seal kit #19
12	4M4108	MW PISTON	
12	4M4104	RPBY 4M4108	Obsolete
13	6R1162-ADI	MIDWAY ADI BASE	
13	6R1162	RPBY 6R1162-ADI	Obsolete
13	6M4162	RPBY 6R1162	Obsolete
14	2A0024	MW PISTON NUT 1-14	
15	N/A	NOT AVAILABLE	Only available in seal kit #19
16	805-124C	PIN CLVS 1.0X3.69 USBL GR5	
16	2A0208	RPBY 805-124C	Obsolete
17	2A0132	MW PIN CLIP	
18	N/A	NOT AVAILABLE	Only available in seal kit #19
19	810-015C	CYL SEAL KIT MW (5A4104) 3 X 7	

Hydraulic Cylinder (810-413C) Cross 2500 PSI

Applies to Models: RBT45108, RBT4596

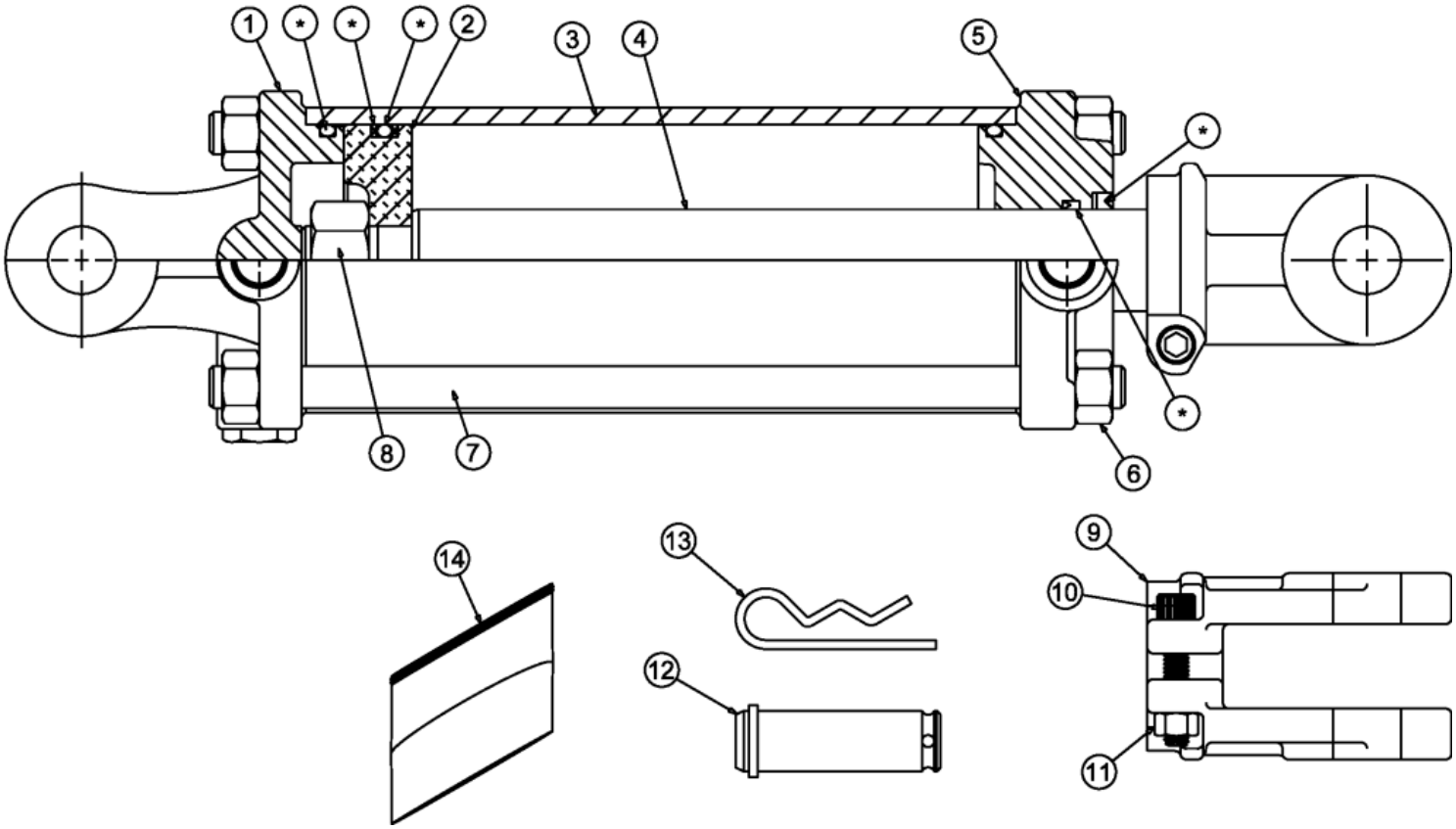

Hydraulic Cylinder (810-413C) Cross 2500 PSI

Applies to Models: RBT45108, RBT4596

Ref.	Part No.	Part Description	Comments
	DWG 74766	Image No.	
	810-413C	CYL 4X16X2 (TIE ROD) *	2,500 PSI
1	1D1209-8	BASE CROSS	
2	1D1401-400	PISTON CROSS	
3	1D0011-1812	TUBE CROSS	
4	1D0210-2125	ROD CROSS	
5	1D1161-26	HEAD CROSS	
6	2A0236-10	NUT CROSS	
7	2A0582-2100	TIE ROD CROSS	
8	2A0246-16	NUT CROSS	
9	1D1013-5	CROSS ROD CLEVIS	
10	2A0079-616	CROSS SCREW, CAP	
11	2A0235-6	CROSS NUT, CLEVIS & TIE ROD	
12	1D1551-16300	CROSS CLEVIS PIN 3"USABLE	
13	805-032C	PIN HAIR COTTER .148 WIRE	
14	810-425C	SEAL KIT CROSS 4 CYL 1C4638	Round Cut Seals

Hydraulic Cylinder (810-413C) Cross 3000 PSI

Applies to Models: RBT45108, RBT4596

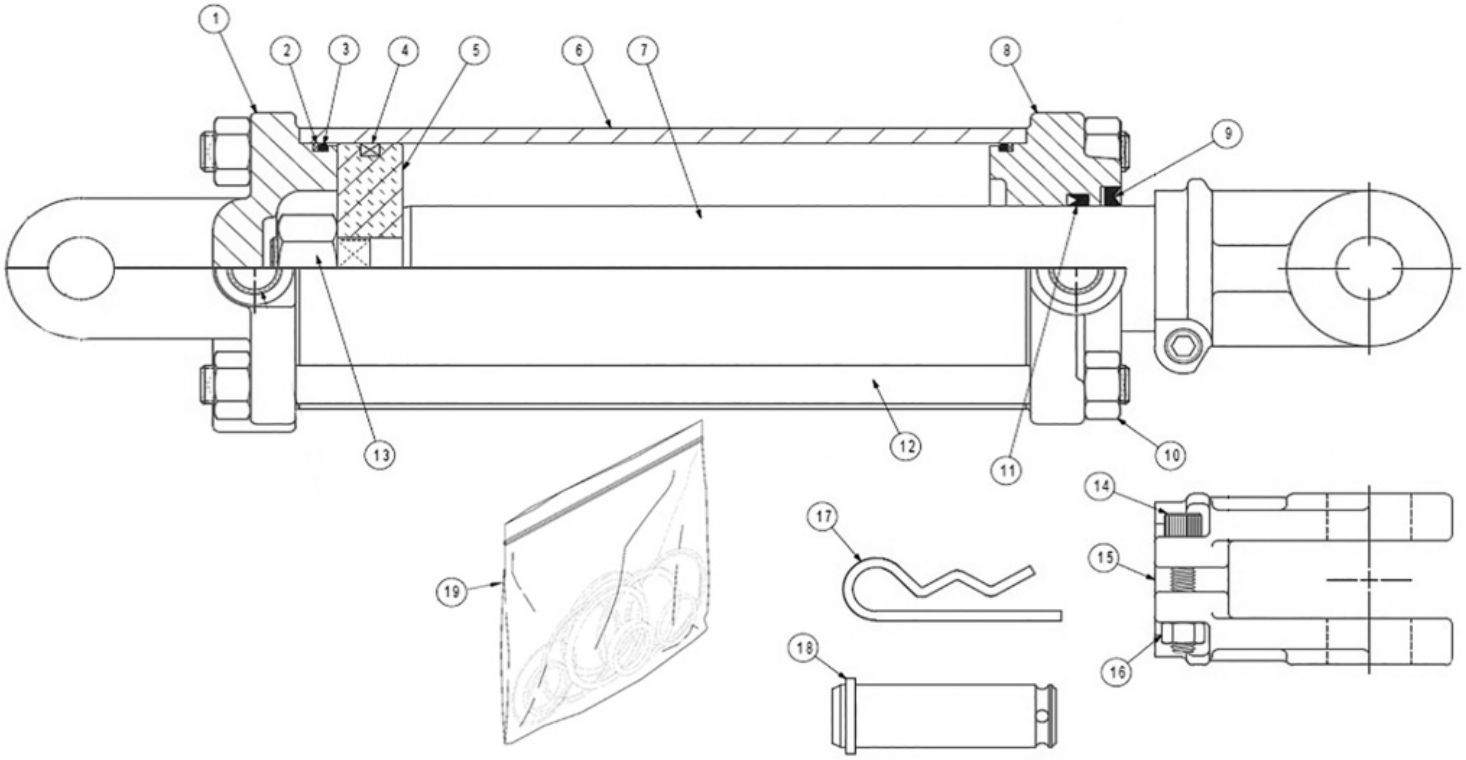

Hydraulic Cylinder (810-413C) Cross 3000 PSI

Applies to Models: RBT45108, RBT4596

Ref.	Part No.	Part Description	Comments
	DWG 72932	Image No.	
	810-413C	CYL 4X16X2 (TIE ROD) *	3,000 PSI
1	4C6903	CROSS BASE CLEVIS	
2		CROSS BACK-UP	Only found in seal kit item 19
3		CROSS O-RING	Only found in seal kit item 19
4		CROSS CROWN SEAL	Only found in seal kit item 19
5	4C4385	CROSS PISTON	
6	1D0011-1812	TUBE CROSS	
7	C7918B-1	CROSS ROD	
8	1D1181-26	CROSS HEAD	
9		WIPER CROSS	Only found in seal kit item 19
10	2A0236-10	NUT CROSS	
11		U-CUP CROSS	Only found in seal kit item 19
12	2A0582-2125	CROSS TIE ROD	
13	2A0246-16	NUT CROSS	
14	2A0079-616	CROSS SCREW, CAP	
15	1D1013-5	CROSS ROD CLEVIS	
16	2A0235-6	CROSS NUT, CLEVIS & TIE ROD	
17	805-032C	PIN HAIR COTTER .148 WIRE	
18	1D1551-16300	CROSS CLEVIS PIN 3"USABLE	
19	850-353C	CROSS SEAL KIT	Square Cut Seals

Hydraulic Cylinder (810-413C) Midway

Applies to Models: RBT45108, RBT4596

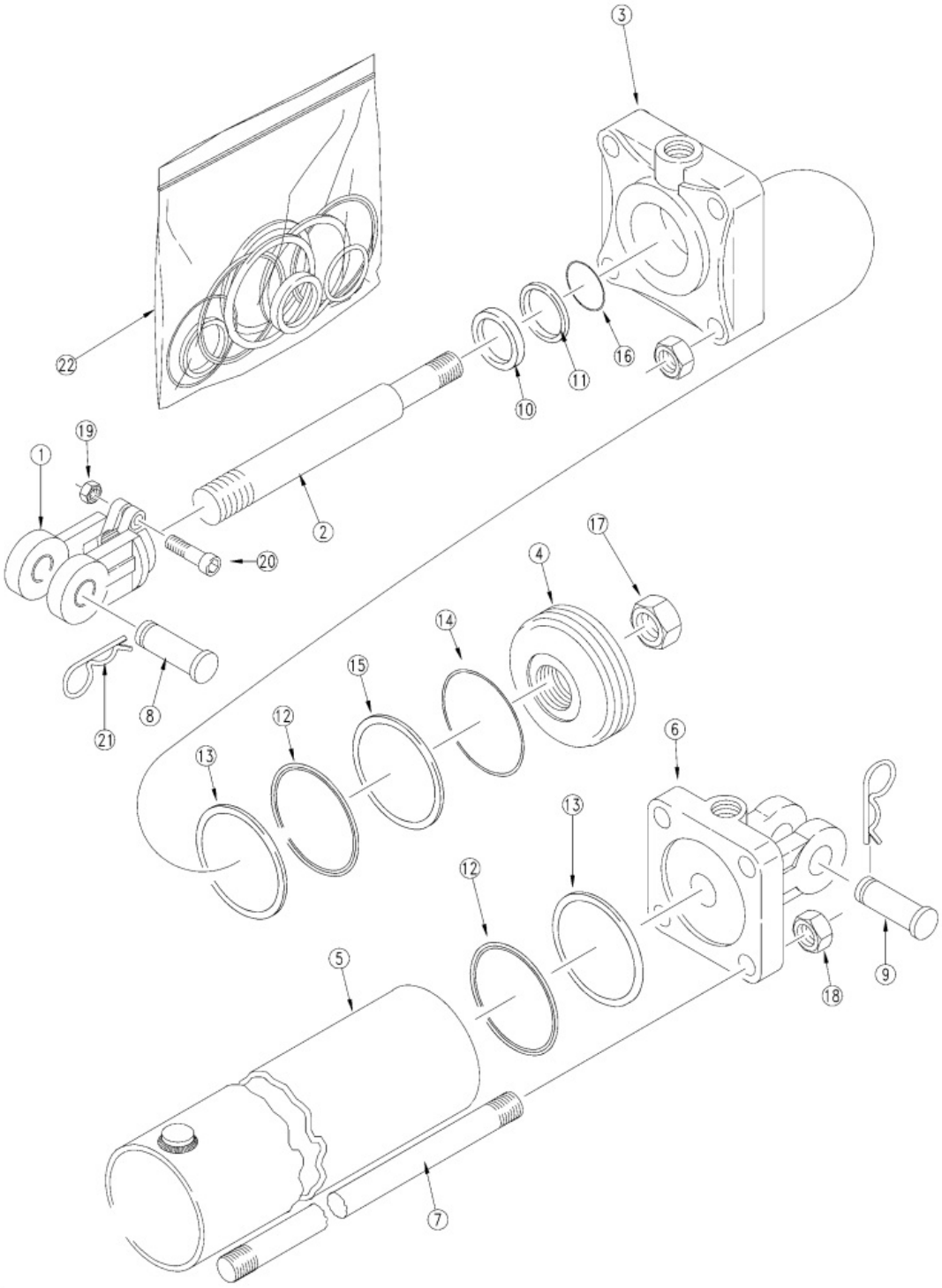

Hydraulic Cylinder (810-413C) Midway

Applies to Models: RBT45108, RBT4596

Ref.	Part No.	Part Description	Comments
	DWG 18934	Drawing Image Number	
	810-413C	CYL 4X16X2 (TIE ROD) *	Complete assembly
1	1M7016-ADI	MIDWAY HARDENED CLEVIS ADI	
1	1M7016	RPBY 1M7016-ADI	Obsolete
2	2M6676	MW ROD 2 DIA. X 16 STROKE	
3	3R6012	HEAD MIDWAY	
4	4M6108	MW PISTON	
5	5M6124	MW TUBE 4 X 16 CYLINDER	
6	6R5162-ADI	MIDWAY ADI BASE	
6	6R5162	RPBY 6R5162-ADI	Obsolete
7	7M6324	MW TIE ROD 4 X 16 CYLINDER	
8	805-124C	PIN CLVS 1.0X3.69 USBL GR5	
8	2A0208	RPBY 805-124C	Obsolete
9	805-124C	PIN CLVS 1.0X3.69 USBL GR5	
9	2A0208	RPBY 805-124C	Obsolete
10	N/A	NOT AVAILABLE	Only available in Seal Kit #22
11	N/A	NOT AVAILABLE	Only available in Seal Kit #22
12	N/A	NOT AVAILABLE	Only available in Seal Kit #22
13	N/A	NOT AVAILABLE	Only available in Seal Kit #22
14	N/A	NOT AVAILABLE	Only available in Seal Kit #22
15	N/A	NOT AVAILABLE	Only available in Seal Kit #22
16	N/A	NOT AVAILABLE	Only available in Seal Kit #22
17	2A0024	MW PISTON NUT 1-14	
18	2A0018	MW TIE ROD NUT	
19	803-234C	NUT HEX 3/8-16 PLAIN	
19	2A0012	RPBY 803-234C	Obsolete
20	802-023C	HHCS 3/8-16X1 3/4 GR5	
20	2A0006	RPBY 802-023C	Obsolete
21	2A0132	MW PIN CLIP	
22	3A6106	MW SEAL KIT 4 X 2 ROD	

Hydraulic Cylinder (810-514C) Midway

Applies to Models: RBT55108, RBT55120, RBT5596

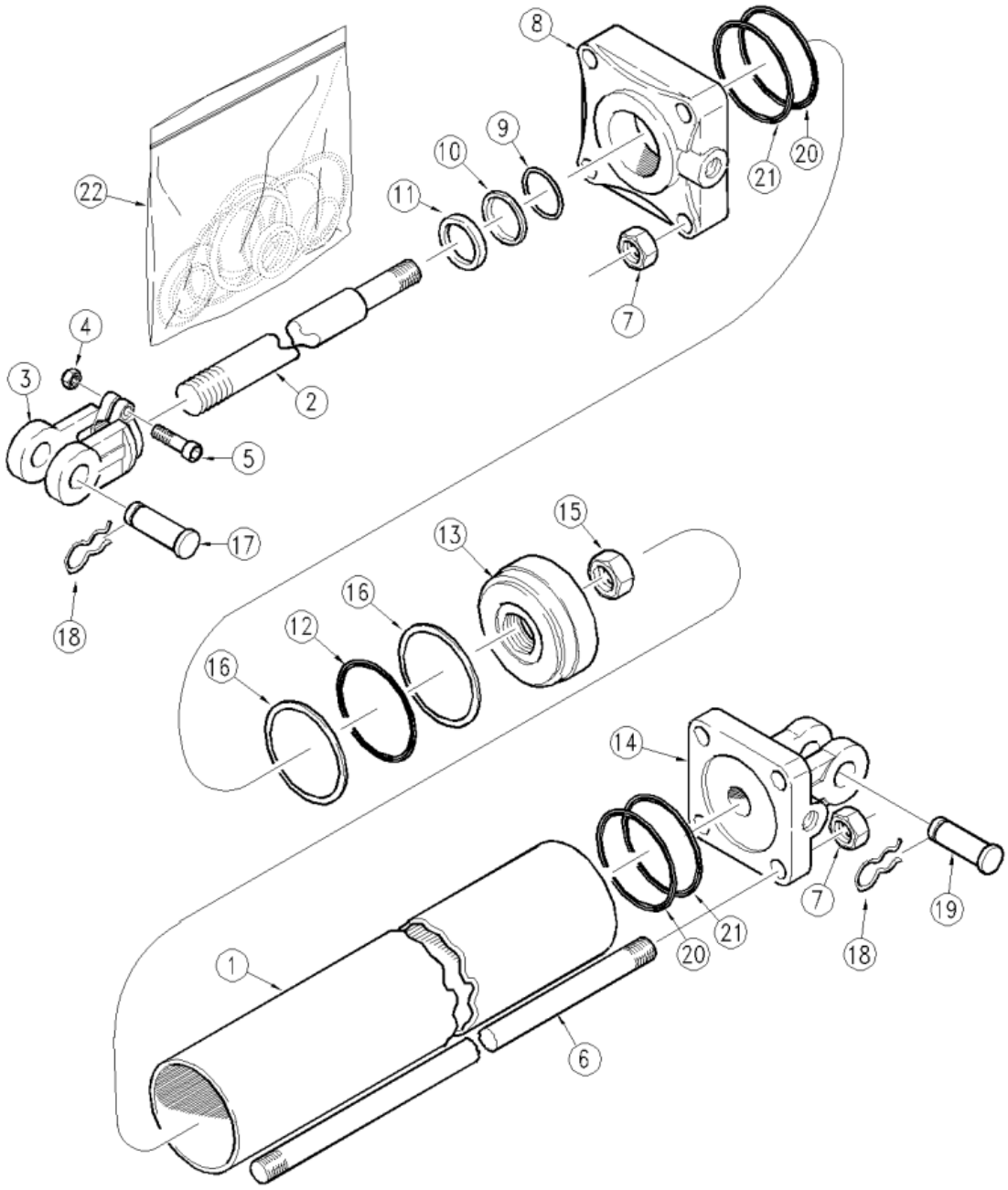

Hydraulic Cylinder (810-514C) Midway

Applies to Models: RBT55108, RBT55120, RBT5596

Ref.	Part No.	Part Description	Comments
	DWG 12500	Drawing Image Number	
	810-514C	CYL 4.5X16X2 ROD (TIE ROD) *	Complete assembly
1	5M7524	MW TUBE	
2	2S7682	MW ROD	
3	1M7021-ADI	MW ROD CLEVIS 1.00PN 1.5-12THD	
3	1M7021	RPBY 1M7021-ADI	Obsolete
4	803-234C	NUT HEX 3/8-16 PLAIN	
4	2A0012	RPBY 803-234C	Obsolete
5	802-023C	HHCS 3/8-16X1 3/4 GR5	
5	2A0006	RPBY 802-023C	Obsolete
6	7M7324	MW TIE ROD	
7	803-257C	NUT HEX 3/4-16 PLAIN	
7	2A0019	RPBY 803-257C	Obsolete
8	3R7612	MW HEAD 4.5 X 16 X 2	
9	N/A	NOT AVAILABLE	Only available in seal kit #22
10	N/A	NOT AVAILABLE	Only available in seal kit #22
11	N/A	NOT AVAILABLE	Only available in seal kit #22
12	N/A	NOT AVAILABLE	Only available in seal kit #22
13	4M7110	MW PISTON	
14	6R7182	RPBY 6R7182-ADI	
15	2A0025	MW PISTON NUT 1 1/4"-12 UNF	
16	N/A	NOT AVAILABLE	Only available in seal kit #22
17	805-124C	PIN CLVS 1.0X3.69 USBL GR5	
17	2A0208	RPBY 805-124C	Obsolete
18	2A0132	MW PIN CLIP	
19	2A0209	MW PIN CLEVIS BASE END	
20	N/A	NOT AVAILABLE	Only available in seal kit #22
21	N/A	NOT AVAILABLE	Only available in seal kit #22
22	810-236C	SEAL KIT MW 4.5 CYL 5A7116	

Hydraulic Cylinder (810-514C) Red Lion

Applies to Models: RBT55108, RBT55120, RBT5596

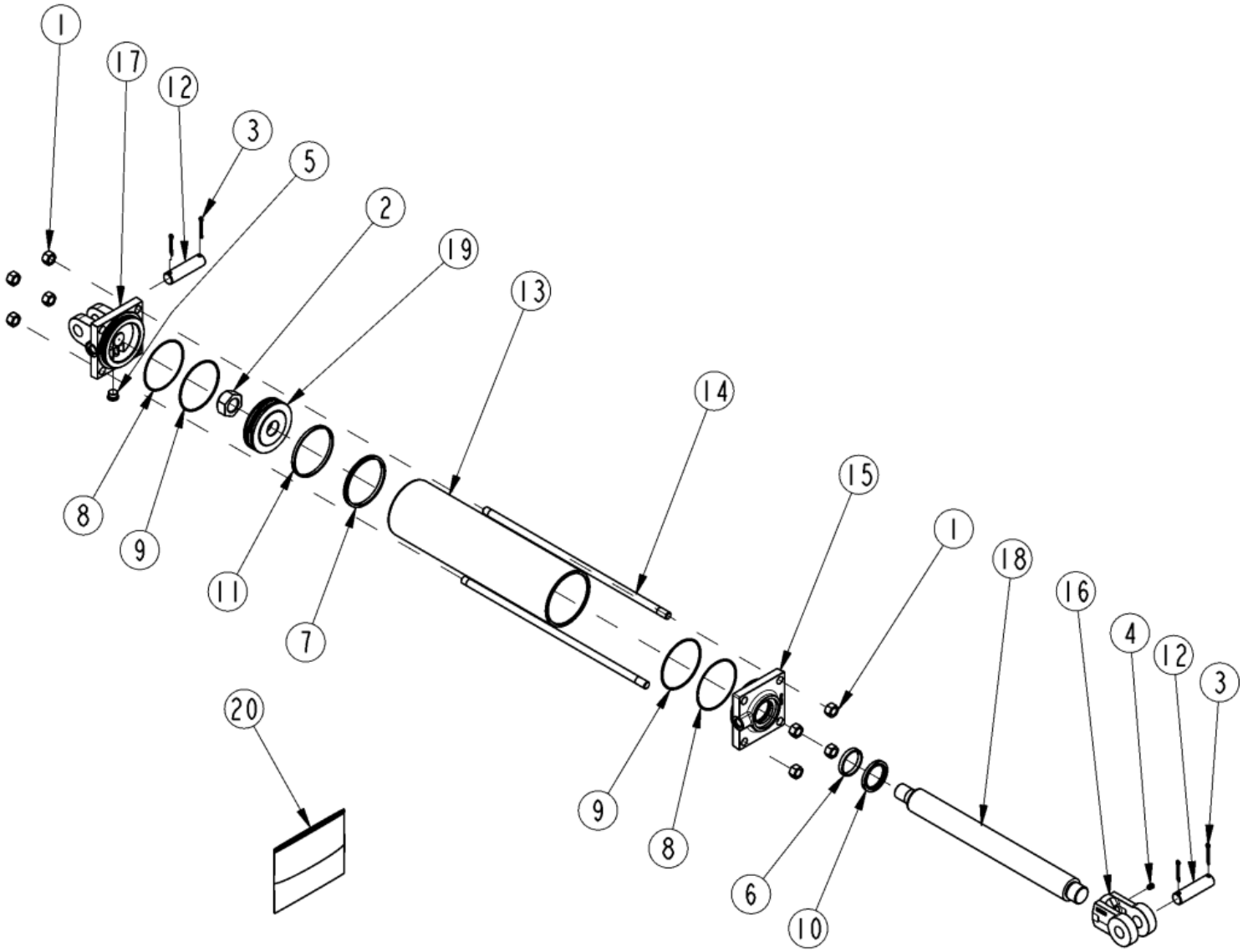

Hydraulic Cylinder (810-514C) Red Lion

Applies to Models: RBT55108, RBT55120, RBT5596

Ref.	Part No.	Part Description	Comments
	DWG 25903	Drawing Image Number	
	810-514C	CYL 4.5X16X2 ROD (TIE ROD) *	Complete assembly
1	803-022C	NUT HEX 5/8-18 PLT	
2	130781	MON PISTON NUT	
3	136008	MON CLEVIS PIN COTTER	
4	801-023C	SCREW SET SH 3/8-16X3/8 TYPE C	
5	186562	LION PLUG 3/4-16UNF SOCKET HD	
6	N/A	NOT AVAILABLE	Only available in Seal Kit #20
7	N/A	NOT AVAILABLE	Only available in Seal Kit #20
8	N/A	NOT AVAILABLE	Only available in Seal Kit #20
9	N/A	NOT AVAILABLE	Only available in Seal Kit #20
10	N/A	NOT AVAILABLE	Only available in Seal Kit #20
11	N/A	NOT AVAILABLE	Only available in Seal Kit #20
12	269722	MON CYL PIN	
13	464307	MON CYL TUBE	
14	492346	LION TIE ROD 5/8 X 16	
15	492585	MON ROD CAP	
16	492658	MON ROD CLEVIS	
17	492708	MON CLEVIS CAP	
18	493914	MON CYL ROD	
19	494797	MON PISTON	
20	648472	MON SEALS REPAIR KIT	

Hydraulic Cylinder (810-624C) Midway

Applies to Models: RBT45108, RBT4596, RBT55108, RBT55120, RBT5596

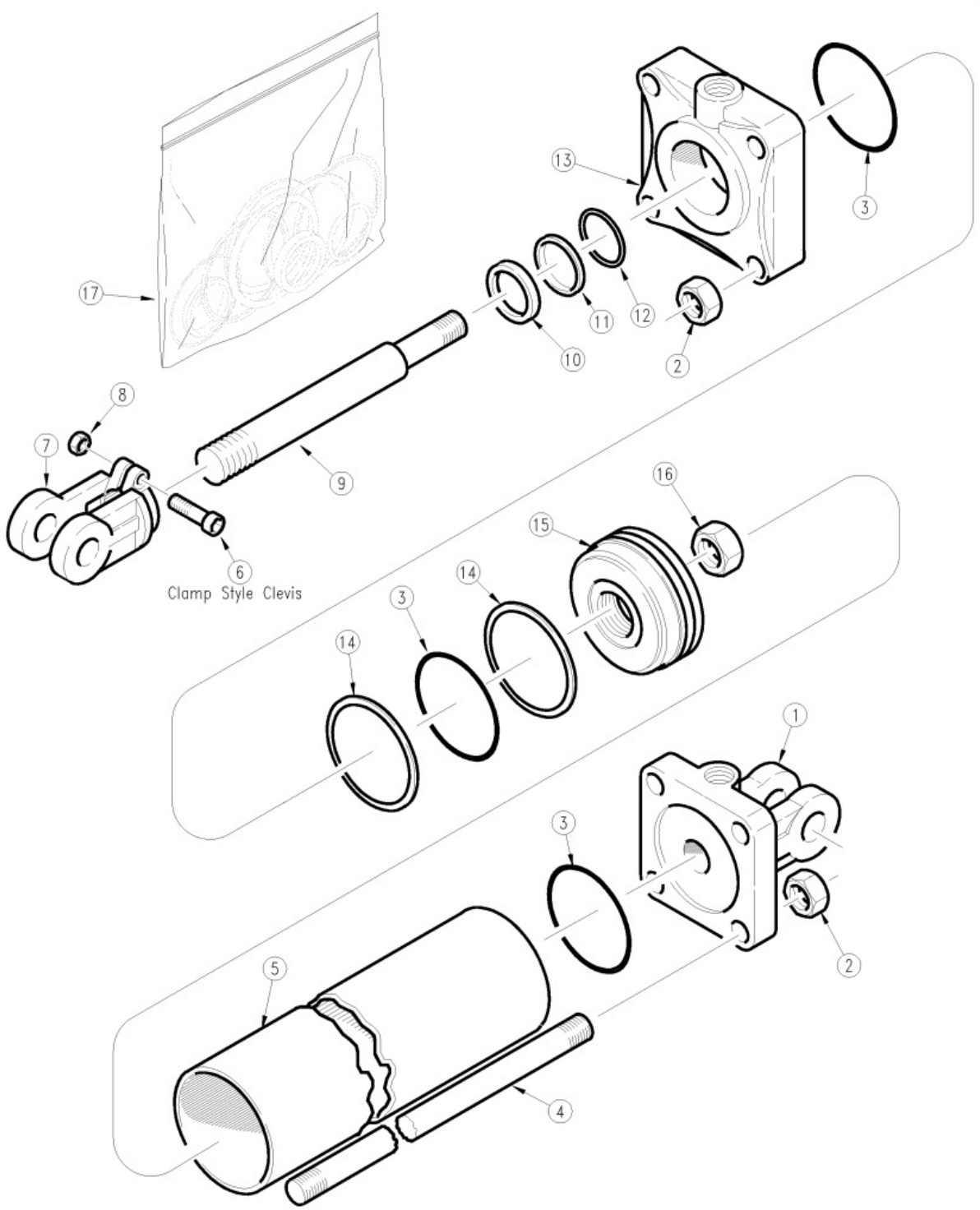

Hydraulic Cylinder (810-624C) Midway

Applies to Models: RBT45108, RBT4596, RBT55108, RBT55120, RBT5596

Ref.	Part No.	Part Description	Comments
	DWG 12499	Drawing Image Number	
	810-624C	CYL 3X8X1.25 ROD (TIE) NO PINS *	Complete assembly
1	6R1164-ADI	MIDWAY ADI BASE	
1	6R1164	RPBY 6R1164-ADI	Obsolete
1	6M4166	RPBY 6R1164	Obsolete
2	2A0014	MW TIE ROD NUT	
3	N/A	NOT AVAILABLE	Only available in seal kit #17
4	7M4316	MW TIE ROD 3 X 8 CYLINDER	
5	5M4116	MW TUBE 3 X 8 CYLINDER	
6	802-023C	HHCS 3/8-16X1 3/4 GR5	
6	2A0006	RPBY 802-023C	Obsolete
7	1M6010-ADI	MIDWAY HARDENED CLEVIS ADI	
8	803-234C	NUT HEX 3/8-16 PLAIN	
8	2A0012	RPBY 803-234C	Obsolete
9	2M4416	MW ROD 1 1/4 DIA	
10	N/A	NOT AVAILABLE	Only available in seal kit #17
11	N/A	NOT AVAILABLE	Only available in seal kit #17
12	N/A	NOT AVAILABLE	Only available in seal kit #17
13	3R1412	MW HEAD 3X1-1/4 ROD PT.E	
13	3M4412	RPBY 3R1412	Obsolete
14	N/A	NOT AVAILABLE	Only available in seal kit #17
15	4M4108	MW PISTON	
15	4M4104	RPBY 4M4108	Obsolete
16	2A0024	MW PISTON NUT 1-14	
17	810-015C	CYL SEAL KIT MW (5A4104) 3 X 7	

Hydraulic Cylinder (810-624C) Red Lion

Applies to Models: RBT45108, RBT4596, RBT55108, RBT55120, RBT5596

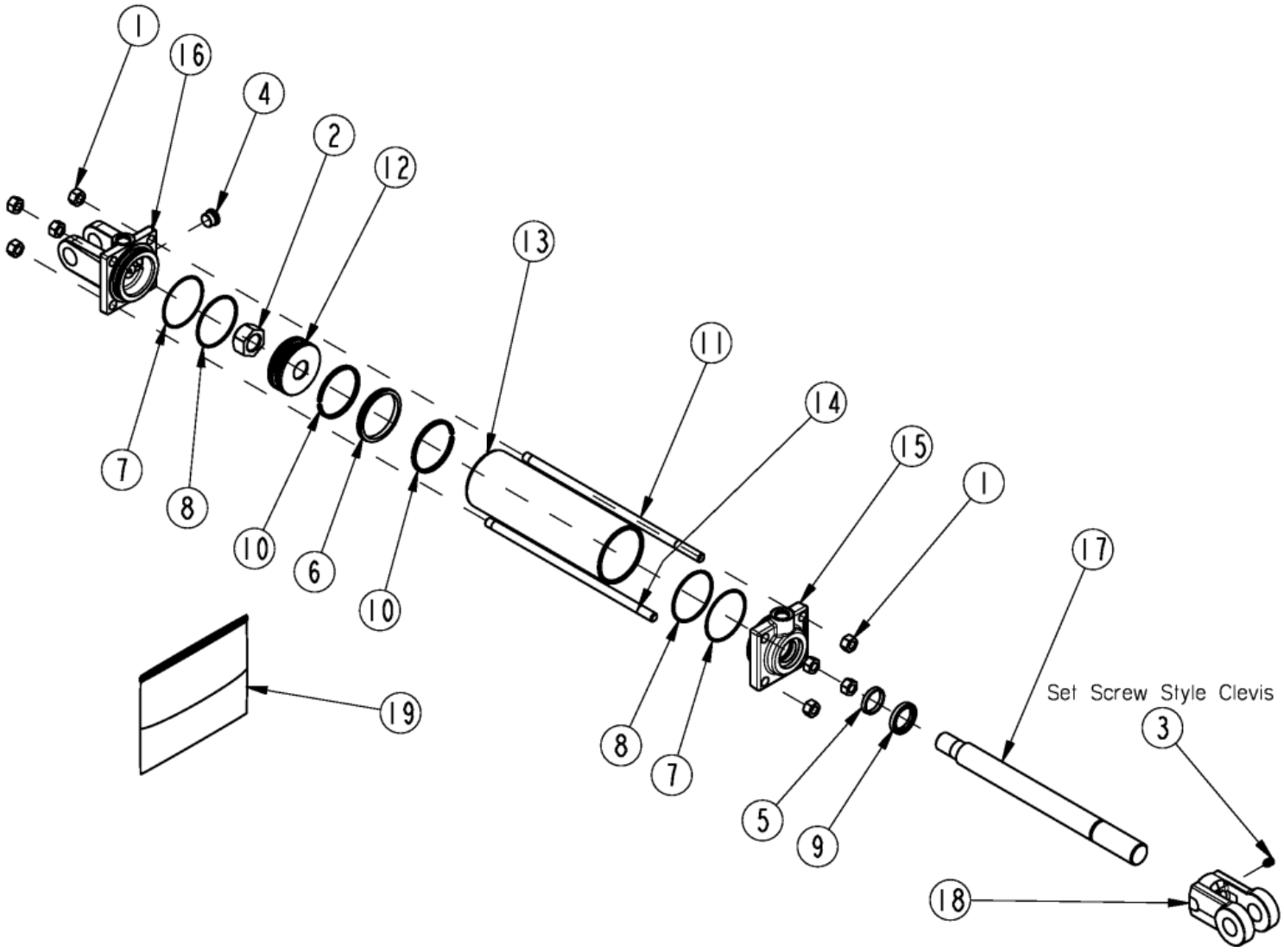

Hydraulic Cylinder (810-624C) Red Lion

Applies to Models: RBT45108, RBT4596, RBT55108, RBT55120, RBT5596

Ref.	Part No.	Part Description	Comments
	DWG 25896	Drawing Image Number	
	810-624C	CYL 3X8X1.25 ROD (TIE) NO PINS *	Complete assembly
1	803-020C	NUT HEX 1/2-13 PLT	
2	130560	MON PISTON NUT	
3	801-023C	SCREW SET SH 3/8-16X3/8 TYPE C	
4	186562	LION PLUG 3/4-16UNF SOCKET HD	
5	N/A	NOT AVAILABLE	Only available in seal kit #19
6	N/A	NOT AVAILABLE	Only available in seal kit #19
7	N/A	NOT AVAILABLE	Only available in seal kit #19
8	N/A	NOT AVAILABLE	Only available in seal kit #19
9	N/A	NOT AVAILABLE	Only available in seal kit #19
10	N/A	NOT AVAILABLE	Only available in seal kit #19
11	292003	MON TIE ROD EXTND THD	
12	258818	MON PISTON2.50-.750-TSS-ISO-WR	
13	491738	MON CYL TUBE	
14	492278	MON TIE ROD	
15	494391	MON ROD CP2.50-1.12-9/16ORB-TS	
16	492675	MON CLEVIS CAP	
17	493211	MON CYL ROD	
18	493830	LION HARDENED ROD CLEVIS 1 1/4	
19	810-887C	MON SEAL KIT 661702	

Hydraulic Cylinder (850-449C) Cross

Applies to Models: RBT45108, RBT4596, RBT40108

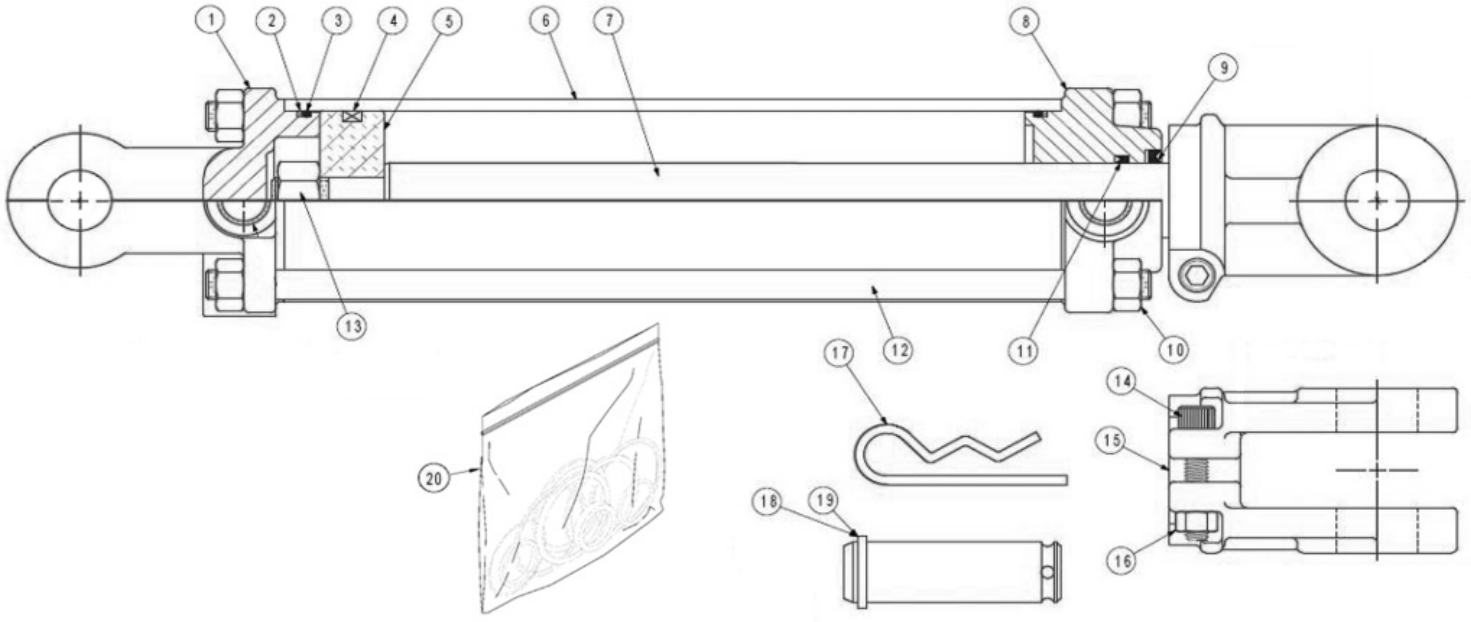

Hydraulic Cylinder (850-449C) Cross

Applies to Models: RBT45108, RBT4596, RBT40108

Ref.	Part No.	Part Description	Comments
	DWG 74608	Image No.	
	850-449C	CYL 3X6X1.25 ROD (TIE ROD) *	Complete assembly
1	4C5853	CROSS BASE CLEVIS	
2	N/A	NOT AVAILABLE	Only available in seal kit #20
3	N/A	NOT AVAILABLE	Only available in seal kit #20
4	N/A	NOT AVAILABLE	Only available in seal kit #20
5	4C4360	CROSS PISTON	
6	1D0007-812	CROSS TUBE	
7	4C2649	CROSS ROD	
8	4C2444	CROSS HEAD	
9	N/A	NOT AVAILABLE	Only available in seal kit #20
10	2A0235-8	CROSS NUT, TIE ROD	
11	N/A	NOT AVAILABLE	Only available in seal kit #20
12	2A0580-1075	CROSS TIE ROD	
13	2A0246-12	CROSS NUT, PISTON	
14	2A0079-616	CROSS SCREW, CAP	
15	1D1013-5	CROSS ROD CLEVIS	
16	2A0235-6	CROSS NUT, CLEVIS & TIE ROD	
17	805-032C	PIN HAIR COTTER .148 WIRE	
18	1D1551-16275	CROSS CLEVIS PIN 2.75"USABLE	
19	1D1551-16300	CROSS CLEVIS PIN 3"USABLE	
20	850-357C	CROSS SEAL KIT	Square Cut Seals

Hydraulics RBT40 Series

Applies to Models: RBT40108, RBT4084, RBT4096

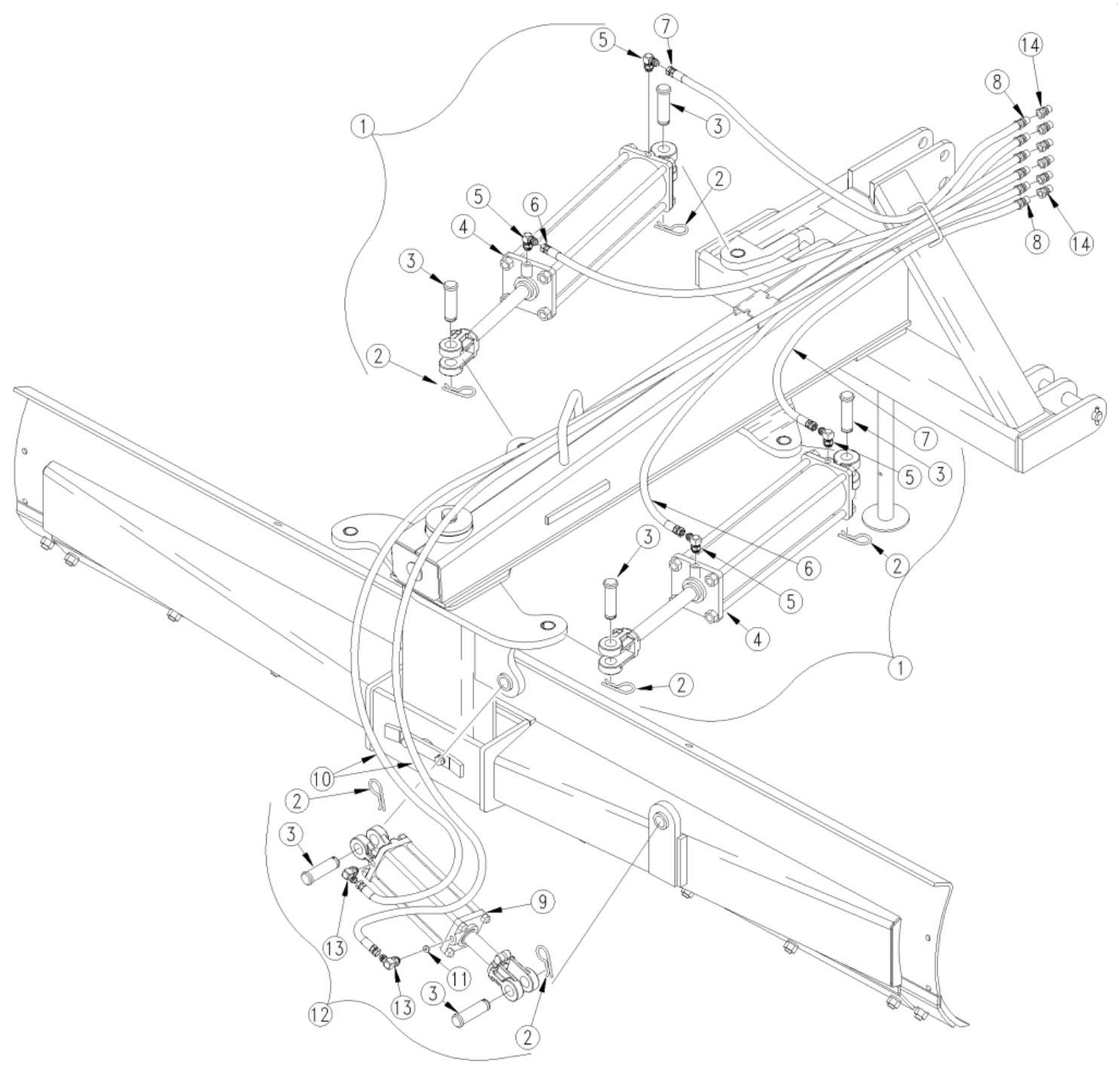

Hydraulics RBT40 Series

Applies to Models: RBT40108, RBT4084, RBT4096

Ref.	Part No.	Part Description	Comments
	DWG 17682	Drawing Image Number	
1	300-181A	40 HYD OFFSET & ANGL CYL ASSY	
2	805-088C	PIN, HAIR COTTER 3/16 WIRE DIA	
3	805-090C	PIN CLVS 1.0X3.20 USBL	
4	810-126C	CYL 3.5X16X1.25 ROD (TIE ROD)	
5	811-216C	EL 3/4MJIC 9/16MORB	
6	841-006C	HH3/8R2 087 3/4FJIC	Lengthened for Quick Hitch Adaptability
6	811-125C	HH3/8R2 082 3/4FJIC	
7	811-988C	HH3/8R2 089 3/4FJIC	Lengthened for Quick Hitch Adaptability
7	811-245C	HH3/8R2 074 3/4FJIC	
8	811-088C	AD 3/4MORB 3/4MJIC	
9	850-449C	CYL 3X6X1.25 ROD (TIE ROD)	S/N 1506433+
9	810-384C	RPBY 850-449C	(Obsolete) S/N 1506432-
10	811-953C	HH3/8R2 129 3/4FJIC	Lengthened for Quick Hitch Adaptability
10	811-127C	HH3/8R2 111 3/4FJIC	
11	196-429D	ORIFICE PLATE 3/32 8 MORB	
12	300-183A	T40 & T45 HYD TILT CYL ASSY	
13	811-063C	EL 3/4MJIC 3/4MORB	
14	811-394C	CP 3/4FORB MALE QD POPPET TYPE	

Hydraulics RBT45 Series

Applies to Models: RBT45108, RBT4596

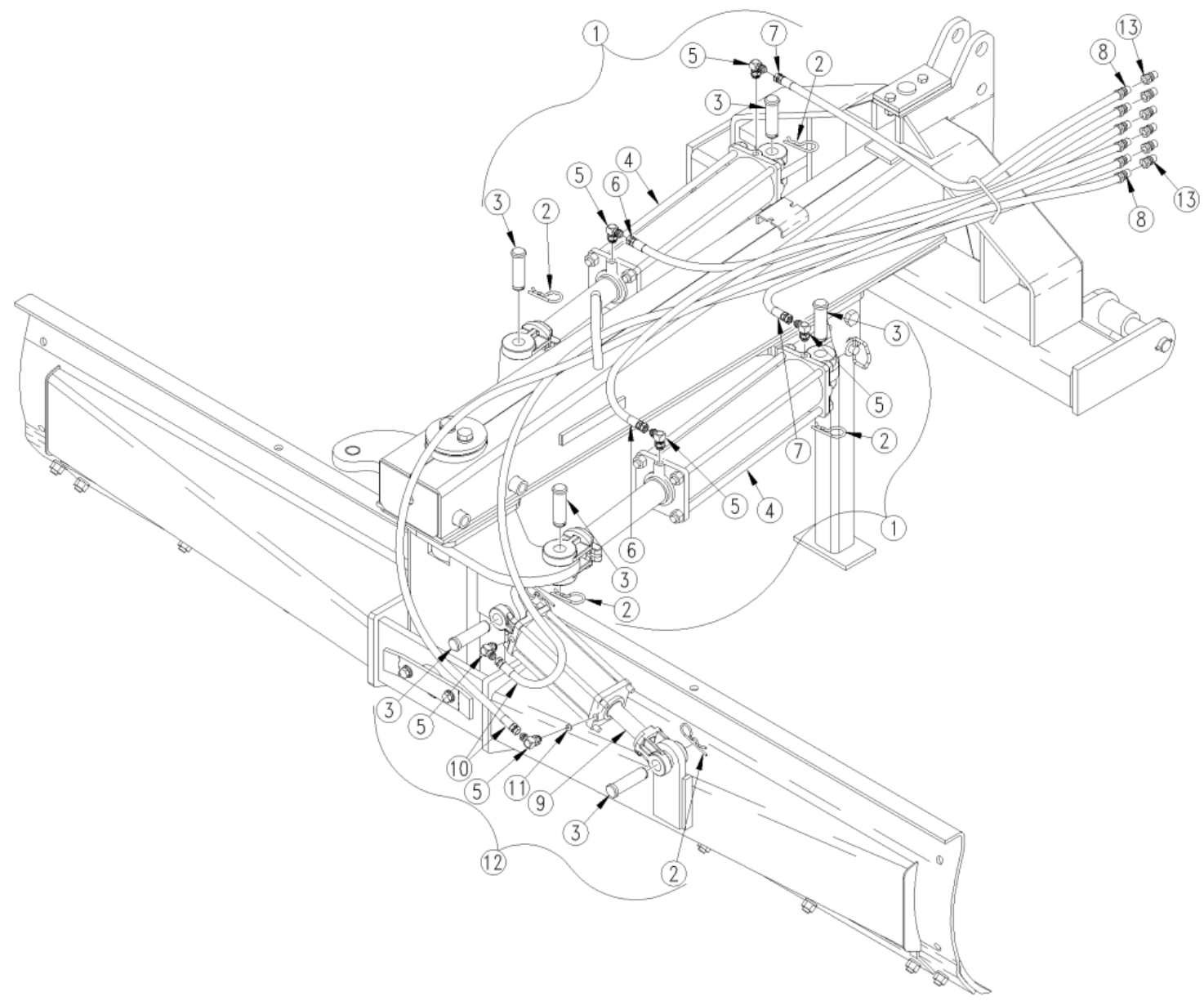

Hydraulics RBT45 Series

Applies to Models: RBT45108, RBT4596

Ref.	Part No.	Part Description	Comments
	DWG 18900	Drawing Image Number	
1	300-197A	T45 HYD OFFSET & ANGL CYL ASSY	
2	805-088C	PIN, HAIR COTTER 3/16 WIRE DIA	
3	805-090C	PIN CLVS 1.0X3.20 USBL	
4	810-413C	CYL 4X16X2 (TIE ROD)	
5	811-063C	EL 3/4MJIC 3/4MORB	
6	841-006C	HH3/8R2 087 3/4FJIC	Lengthened for Quich Hitch adaptability
6	811-125C	HH3/8R2 082 3/4FJIC	
7	811-985C	HH3/8R2 078 3/4FJIC	Lengthened for Quich Hitch adaptability
7	811-245C	HH3/8R2 074 3/4FJIC	
8	811-088C	AD 3/4MORB 3/4MJIC	
9	850-449C	CYL 3X6X1.25 ROD (TIE ROD)	S/N 1506433+
9	810-384C	RPBY 850-449C	(Obsolete) S/N 1506432-
10	811-953C	HH3/8R2 129 3/4FJIC	Lengthened for Quich Hitch adaptabiliity
10	811-897C	HH3/8R2 123 3/4FJIC	
11	196-429D	ORIFICE PLATE 3/32 8 MORB	
12	300-183A	T40 & T45 HYD TILT CYL ASSY	
13	811-394C	CP 3/4FORB MALE QD POPPET TYPE	

Hydraulics RBT55 Series

Applies to Models: RBT55108, RBT55120, RBT5596

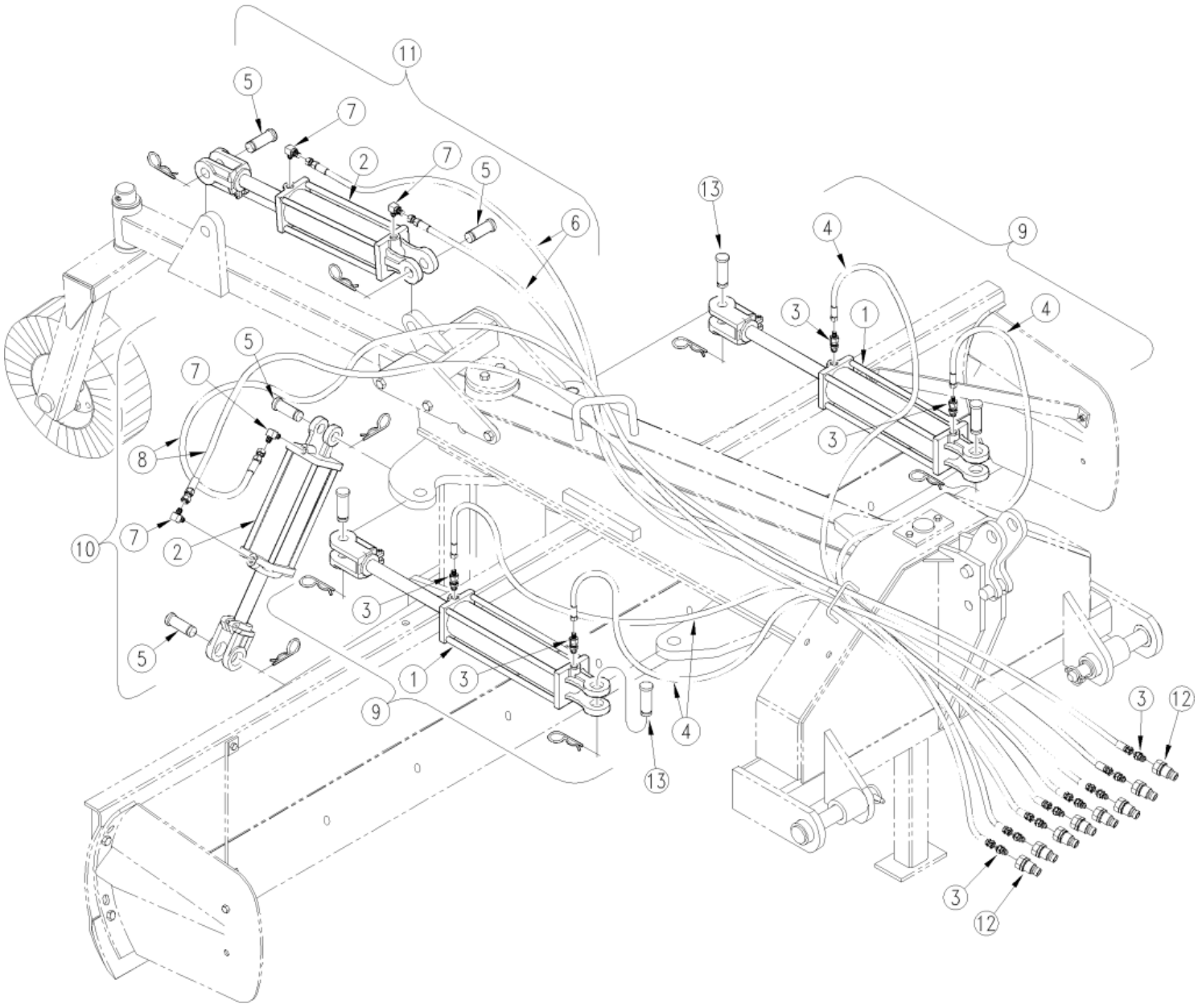

Hydraulics RBT55 Series

Applies to Models: RBT55108, RBT55120, RBT5596

Ref.	Part No.	Part Description	Comments
	DWG 12525	Drawing Image Number	
1	810-514C	CYL 4.5X16X2 ROD (TIE ROD)	
1	810-213C	RPBY 810-514C	Obsolete
2	810-195C	CYL 3X8X1.25 ROD (TIE) NO PINS	(Option)
3	811-088C	AD 3/4MORB 3/4MJIC	
4	811-897C	HH3/8R2 123 3/4FJIC	Lengthened for Quich Hitch Adaptability
4	811-247C	HH3/8R2 116 3/4FJIC	
5	805-004C	PIN CLVS 1.0X2.75 USBL	(Option)
6	811-897C	HH3/8R2 123 3/4FJIC	Lengthened for Quich Hitch Adaptability
6	811-247C	HH3/8R2 116 3/4FJIC	(Option)
7	811-063C	EL 3/4MJIC 3/4MORB	
8	811-907C	HH3/8R2 151 3/4FJIC	Lengthened for Quich Hitch Adaptability
8	811-126C	HH3/8R2 140 3/4FJIC	
9	300-151A	HYD OFFSET & ANGLE CYL. ASSY	Includes one of item 1; two of item 4 and four of item 3.
10	300-152A	HYD TILT CYL ASSY	Includes one of item 2 and two of items 3; 5; 7 and 8.
11	300-153L	GAUGE WHEEL HYDRAULICS ASSY	Includes one of item 2 and two of items 5; 6 and 7. (Option)
12	811-394C	CP 3/4FORB MALE QD POPPET TYPE	Accessory
13	805-124C	PIN CLVS 1.0X3.69 USBL GR5	

Decals RBT40 Series

Applies to Models: RBT40108, RBT4084, RBT4096

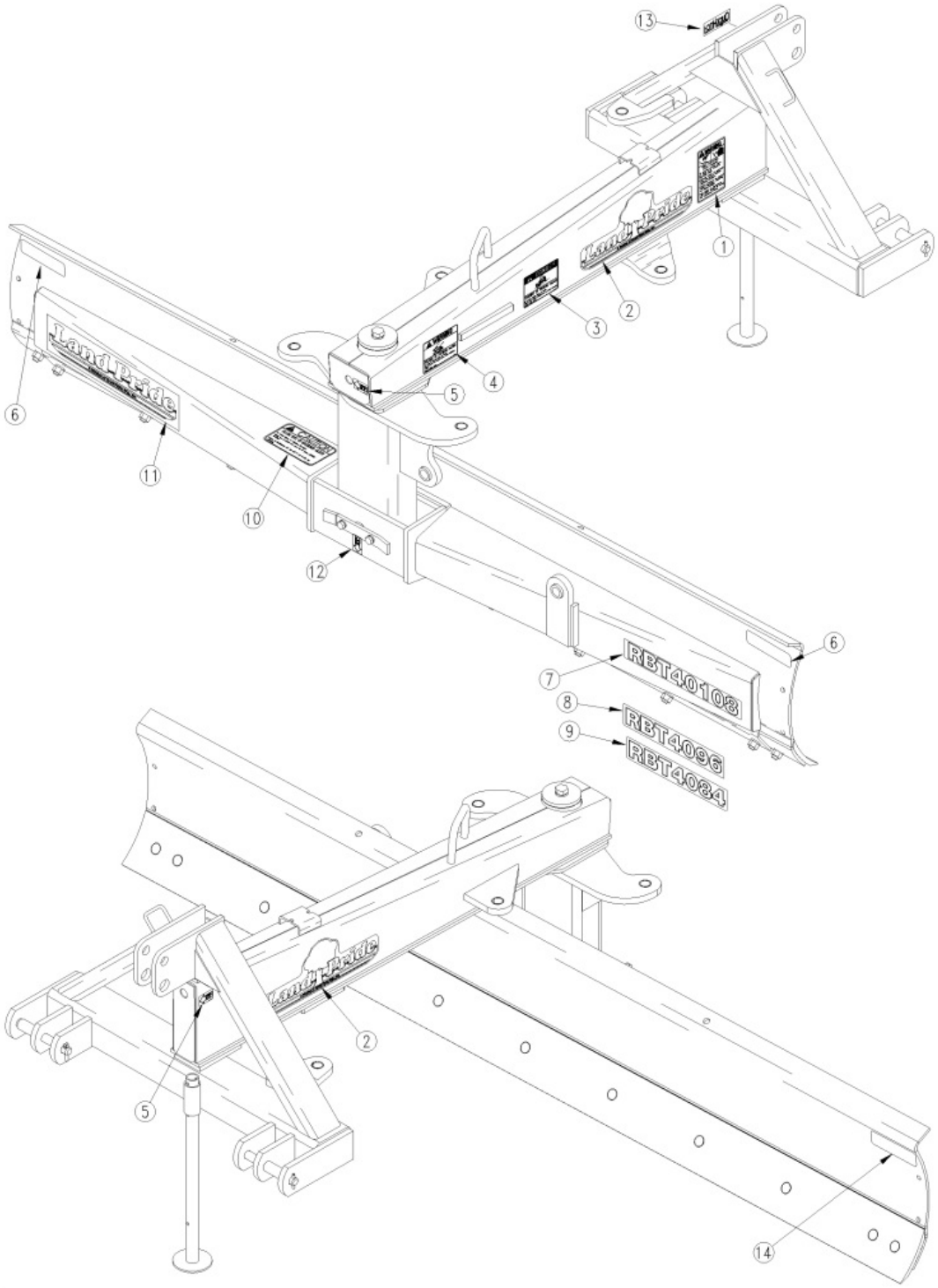

Decals RBT40 Series

Applies to Models: RBT40108, RBT4084, RBT4096

Ref.	Part No.	Part Description	Comments
	DWG17686	Drawing Image Number	
	300-186A	T40 SERIES DECAL BUNDLE	
	300-187A	RBT SAFETY DECAL BUNDLE	
		*	
1	818-339C	DECAL WARNING HIGH PRESSUR SML	
2	838-962C	DECAL LP 13" W/TREE BROWN/GOLD	Green, Orange & Red Units
2	818-891C	RPBY 838-962C	(Obsolete) Beige Unit
3	818-487C	DECAL DANGER CRUSHING/PINCHING	
4	818-491C	DECAL WARNING PINCH/SHEAR	
5	818-298C	DECAL GREASE 25HRS BLACK/WHITE	
6	838-614C	DECAL REFLECTOR RED 2X9	S/N 821694+
6	818-230C	DECAL RED REFLECTOR	S/N 821693-
7	818-984C	DECAL RBT40108-BEIGE	
8	818-983C	DECAL RBT4096-BEIGE	
9	818-982C	DECAL RBT4084-BEIGE	
10	838-075C	DECAL CAUTION RBT MBOARD FALL	
11	838-966C	DECAL LANDPRIDE 22" BROWN/GOLD	(S/N _____+)
11	838-965C	DECAL LANDPRIDE 16" BROWN/GOLD	
11	818-902C	RPBY 838-965C	Obsolete (S/N _____-)
12	818-298C	DECAL GREASE 25HRS BLACK/WHITE	
13	838-517C	DECAL QUICK HITCH SYSTEM	
14	838-615C	DECAL REFLECTOR AMBER 2X9	S/N 821694+ RBT40108 only
14	818-229C	DECAL AMBER REFLECTOR	S/N 710350 to 821693

Decals RBT45 Series

Applies to Models: RBT45108, RBT4596

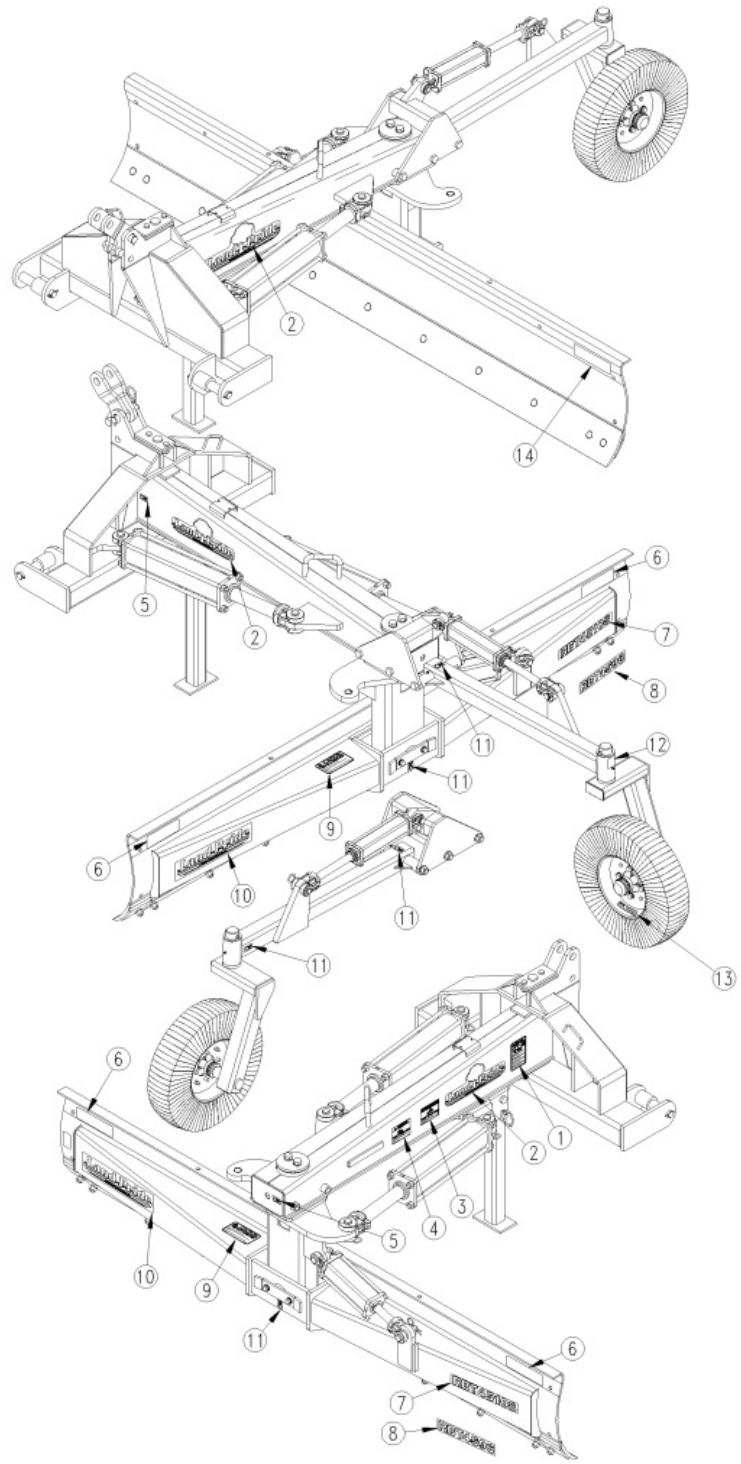

Decals RBT45 Series

Applies to Models: RBT45108, RBT4596

Ref.	Part No.	Part Description	Comments
	DWG 18901	Drawing Image Number	
	300-205A	T45 SERIES DECAL BUNDLE	
	300-187A	RBT SAFETY DECAL BUNDLE	
		*	
1	818-339C	DECAL WARNING HIGH PRESSUR SML	
2	838-962C	DECAL LP 13" W/TREE BROWN/GOLD	Green, Orange & (Red 898816+) Units
2	818-891C	RPBY 838-962C	(Obsolete) Beige Unit
3	818-487C	DECAL DANGER CRUSHING/PINCHING	
4	818-491C	DECAL WARNING PINCH/SHEAR	
5	818-298C	DECAL GREASE 25HRS BLACK/WHITE	
6	838-614C	DECAL REFLECTOR RED 2X9	S/N 821694+
6	818-230C	DECAL RED REFLECTOR	S/N 821693-
7	838-152C	DECAL RBT45108-BEIGE	
8	838-151C	DECAL RBT4596-BEIGE	
9	838-075C	DECAL CAUTION RBT MBOARD FALL	
10	838-966C	DECAL LANDPRIDE 22" BROWN/GOLD	(S/N _____+)
10	838-965C	DECAL LANDPRIDE 16" BROWN/GOLD	
10	818-902C	RPBY 838-965C	Obsolete (S/N _____-)
11	818-298C	DECAL GREASE 25HRS BLACK/WHITE	
12	818-335C	DECAL RED NARROW REFLECTOR	
13	818-681C	DECAL NOTICE - 20 MPH MAX	
14	838-615C	DECAL REFLECTOR AMBER 2X9	S/N 821694+ RBT45108 only
14	818-229C	DECAL AMBER REFLECTOR	S/N 710350 to 821693

Decals RBT55 Series

Applies to Models: RBT55108, RBT55120, RBT5596

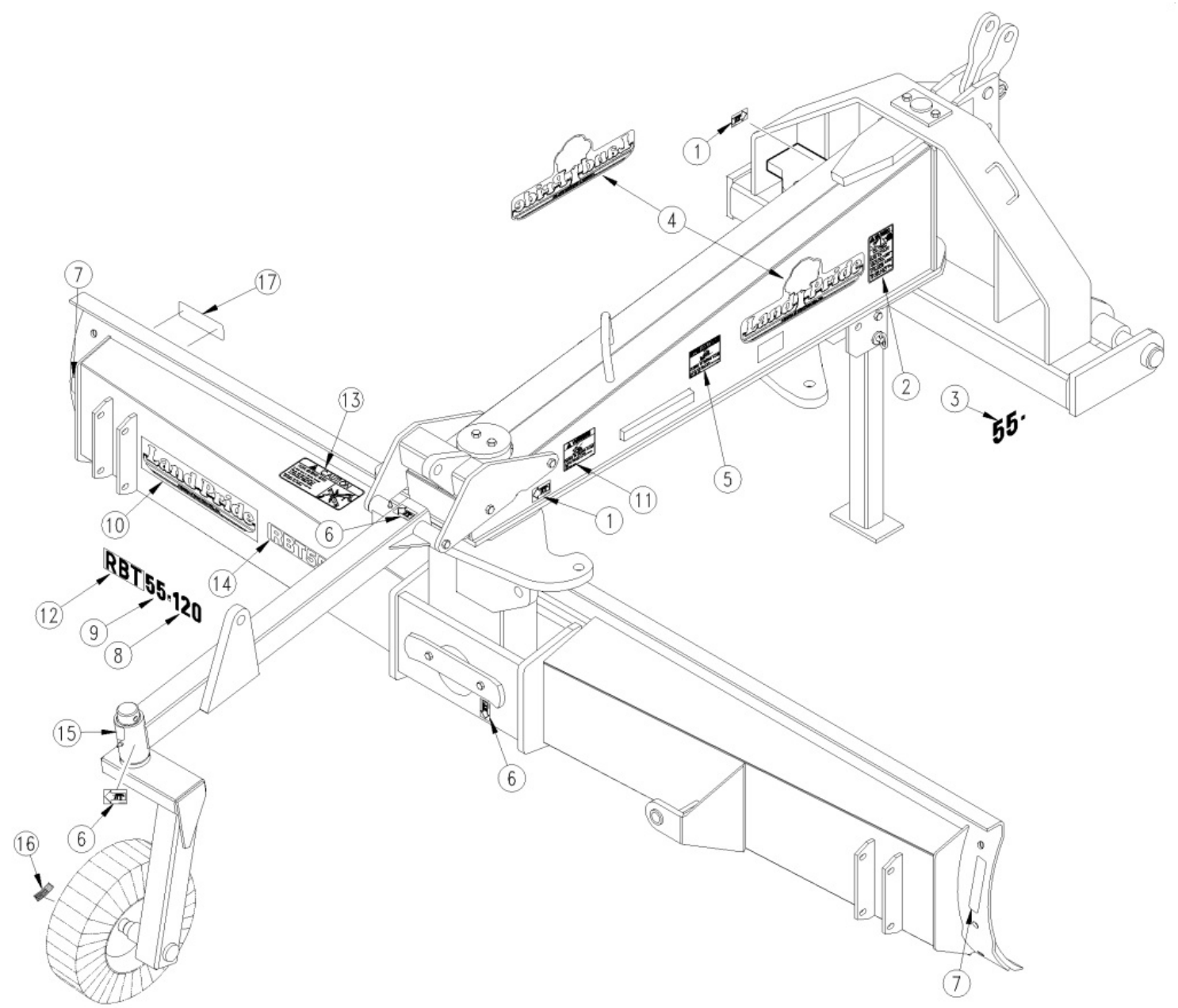

Decals RBT55 Series

Applies to Models: RBT55108, RBT55120, RBT5596

Ref.	Part No.	Part Description	Comments
	DWG 17581	Drawing Image Number	
	300-160A	T55 SERIES DECAL BUNDLE	Includes one of items 1 and 8 through 11; two of items 2 through 5 and 7 and three of item 6.
	300-161A	T55 SAFETY DECAL BUNDLE *	Includes one of item 11 and two of items 2; 5 and 7.
1	818-138C	RPBY 818-298C	
2	818-339C	DECAL WARNING HIGH PRESSUR SML	
3	818-197C	DECAL 55 SERIES BLACK	No longer used.
4	838-964C	DECAL LP 16" W/TREE BROWN/GOLD	
4	818-893C	RPBY 838-964C	Obsolete (S/N 252596+) Beige Unit Rev. 2 not compat. w/Rev. 1
4	838-965C	DECAL LANDPRIDE 16" BROWN/GOLD	Green Unit, Orange Unit & Red Unit
4	848-450C	DECAL LP W/TREE 19" BROWN/GOLD	
4	818-895C	RPBY 848-450C	Obsolete
4	818-162C	RPBY 818-895C	Obsolete (S/N 252595-) Rev. 1
5	818-487C	DECAL DANGER CRUSHING/PINCHING	
6	818-298C	DECAL GREASE 25HRS BLACK/WHITE	
7	838-614C	DECAL REFLECTOR RED 2X9	S/N 821694+
7	818-230C	DECAL RED REFLECTOR	S/N 821693-
8	818-112C	DECAL 96 LP - BUCKSKIN	Obsolete (S/N 252595-)
8	818-200C	DECAL 108 LP BUCKSKIN	(S/N 252595-)
8	818-201C	DECAL 120 LP BUCKSKIN	(S/N 252595-)
9	818-199C	DECAL 55 SERIES BUCKSKIN	(S/N 252595-)
10	838-966C	DECAL LANDPRIDE 22" BROWN/GOLD	(S/N _____+)
10	838-965C	DECAL LANDPRIDE 16" BROWN/GOLD	
10	818-902C	RPBY 838-965C	Obsolete (S/N 252596 to _____) Rev. 2 not compat. w/Rev. 1
10	818-163C	RPBY 818-902C	(S/N 252595-) Rev. 1
11	818-491C	DECAL WARNING PINCH/SHEAR	
12	818-727C	DECAL RBT LAND PRIDE BUCKSKIN	(S/N 252595-)
13	838-075C	DECAL CAUTION RBT MBOARD FALL	
14	818-989C	DECAL RBT5596-BEIGE	(S/N 252596+)
14	818-990C	DECAL RBT55108-BEIGE	(S/N 252596+)
14	818-991C	DECAL RBT55120-BEIGE	(S/N 252596+)
15	818-335C	DECAL RED NARROW REFLECTOR	
16	818-681C	DECAL NOTICE - 20 MPH MAX	
17	838-615C	DECAL REFLECTOR AMBER 2X9	S/N 821694+
17	818-229C	DECAL AMBER REFLECTOR	S/N 710350 to 821693 RBT55120 only

Touch-up Paints - LP

Applies to Models: RBT45108, RBT4596, RBT40108, RBT4084, RBT4096, RBT55108, RBT55120, RBT5596

No diagram associated with this Parts List

Touch-up Paints - LP

Applies to Models: RBT45108, RBT4596, RBT40108, RBT4084, RBT4096, RBT55108, RBT55120, RBT5596

Ref.	Part No.	Part Description	Comments
1	821-011C	PAINT LP BEIGE SPRAY CAN	Spray can
1	821-011CTU	PAINT LP BEIGE TOUCH-UP 4OZ	Touch-up bottle with brush
1	821-011CQT	PAINT LP BEIGE QUART	Quart can
1	821-011CGL	PAINT LP BEIGE GALLON	Gallon can
2	821-070C	PAINT GP GLOSS BLACK SPRAY CAN	Spray can
2	821-070CTU	PAINT GLOSS BLACK TOUCH-UP 4OZ	Touch-up bottle with brush
2	821-070CQT	PAINT GP GLOSS BLACK QUART	Quart can
2	821-070CGL	PAINT GP GLOSS BLACK GALLON	Gallon can
3	821-054C	PAINT MED. RED SPRAY TRCK/CTR	Spray can
3	821-054CTU	PAINT MED RED TOUCH-UP 4OZ	Touch-up bottle with brush
3	821-054CQT	PAINT MED RED QUART	Quart can
3	821-054CGL	PAINT MED RED GALLON	Gallon can
4	821-058C	PAINT GREEN SPRAY CUTTERS	Spray can
4	821-058CTU	PAINT GREEN TOUCH-UP 4OZ	Touch-up bottle with brush
4	821-058CQT	PAINT GREEN QUART	Quart can
4	821-058CGL	PAINT GREEN GALLON	Gallon can
5	821-066C	PAINT ORANGE SPRAY CAN	Spray can
5	821-066CTU	PAINT ORANGE TOUCH-UP 4OZ	Touch-up bottle with brush
5	821-066CQT	PAINT ORANGE QUART	Quart can
5	821-066CGL	PAINT ORANGE GALLON	Gallon can
6	821-067C	PAINT BLUE SPRAY CAN	Spray can
6	821-067CTU	PAINT BLUE TOUCH-UP 5OZ	Touch-up bottle with brush
6	821-067CQT	PAINT BLUE QUART	Quart can
6	821-067CGL	PAINT BLUE GALLON	Gallon can
7	821-080C	PAINT ALUMINUM/ZINC SPRAY CAN	Spray can
7	821-080CTU	PAINT ALUMINUM/ZINC TOUCH UP	Touch-up bottle with brush
7	821-080CQT	PAINT ALUMINUM/ZINC QUART	Quart can
7	821-080CGL	PAINT ALUMINUM/ZINC GALLON	Gallon can

End Plates RBT40 Series

Applies to Models: RBT40108, RBT4084, RBT4096

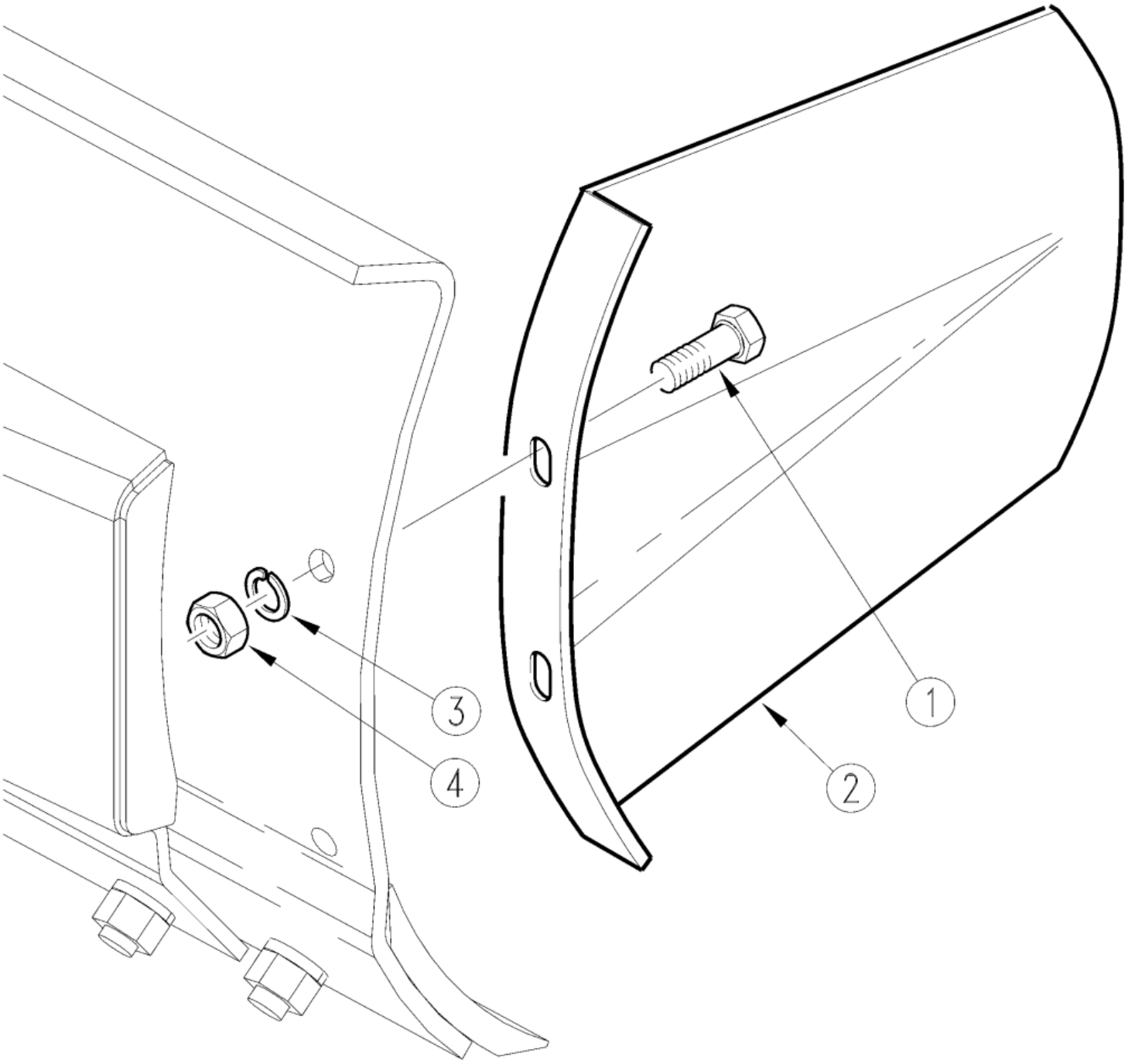

End Plates RBT40 Series

Applies to Models: RBT40108, RBT4084, RBT4096

Ref.	Part No.	Part Description	Comments
	DWG17688	Drawing Image Number	
	301-010A	SIDE PLATE - PAIR	
1	802-091C	HHCS 1/2-13X1 1/2 GR5	
2	301-011H	SIDE PLATE WELDMENT	
3	804-065C	WASHER INT-EXT 1/2 PLT	
4	803-020C	NUT HEX 1/2-13 PLT	

End Plates RBT45 Series

Applies to Models: RBT45108, RBT4596

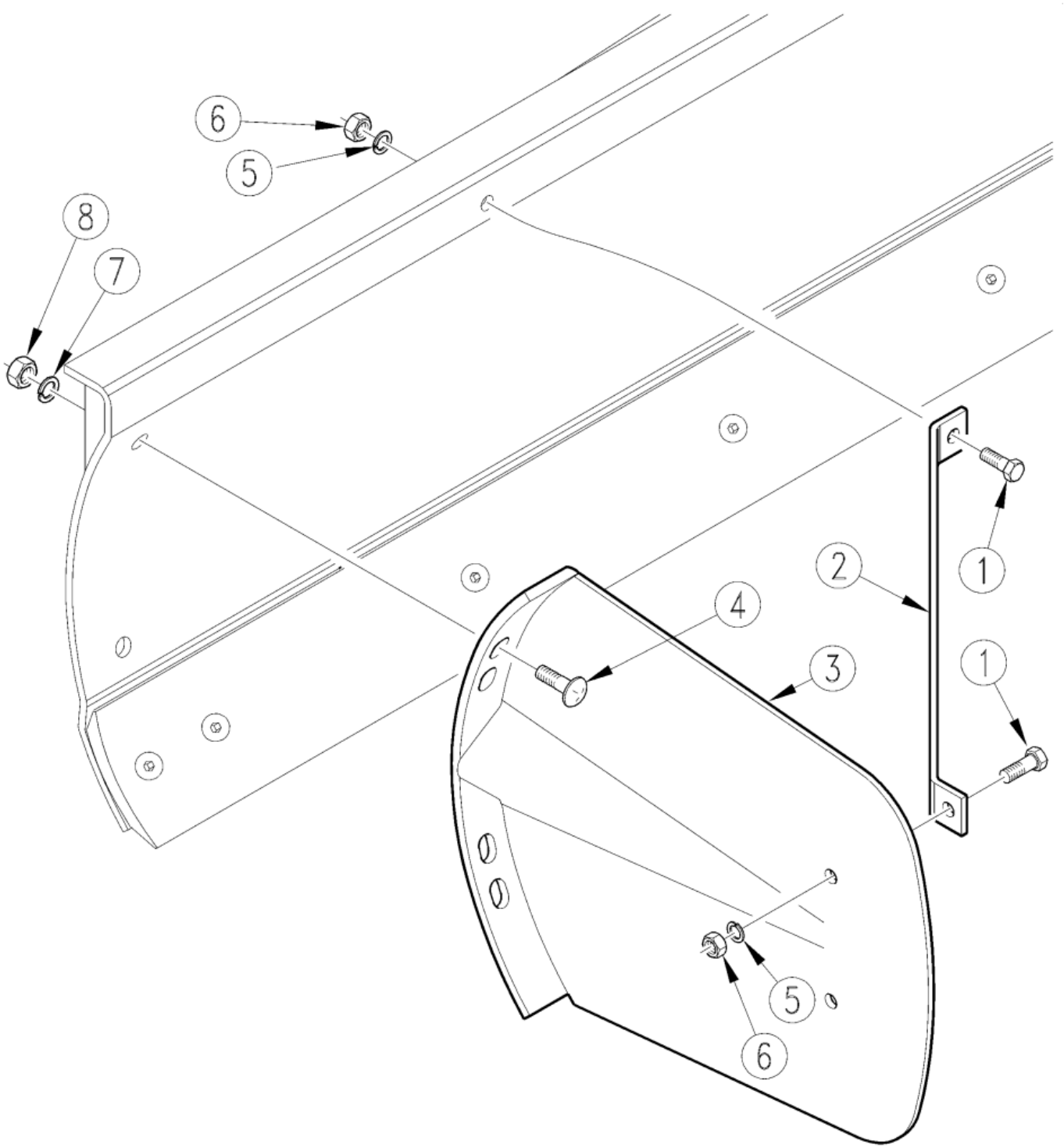

End Plates RBT45 Series

Applies to Models: RBT45108, RBT4596

Ref.	Part No.	Part Description	Comments
	DWG12550	Drawing Image Number	
	301-147A	END PLATES FOR 45/55 SERIES	Includes two of items 2 and 3 and four of items 1 and 4 through 8
1	802-034C	HHCS 1/2-13X1 1/4 GR5	
2	301-208D	SIDE PLATE SUPPORT STRAP	
3	301-159H	BLADE END PLATE	
4	802-088C	RHSNB 5/8-11X2 GR5	
5	804-015C	WASHER LOCK SPRING 1/2 PLT	
6	803-020C	NUT HEX 1/2-13 PLT	
7	804-022C	WASHER LOCK SPRING 5/8 PLT	
8	803-021C	NUT HEX 5/8-11 PLT	

End Plates RBT55 Series

Applies to Models: RBT55108, RBT55120, RBT5596

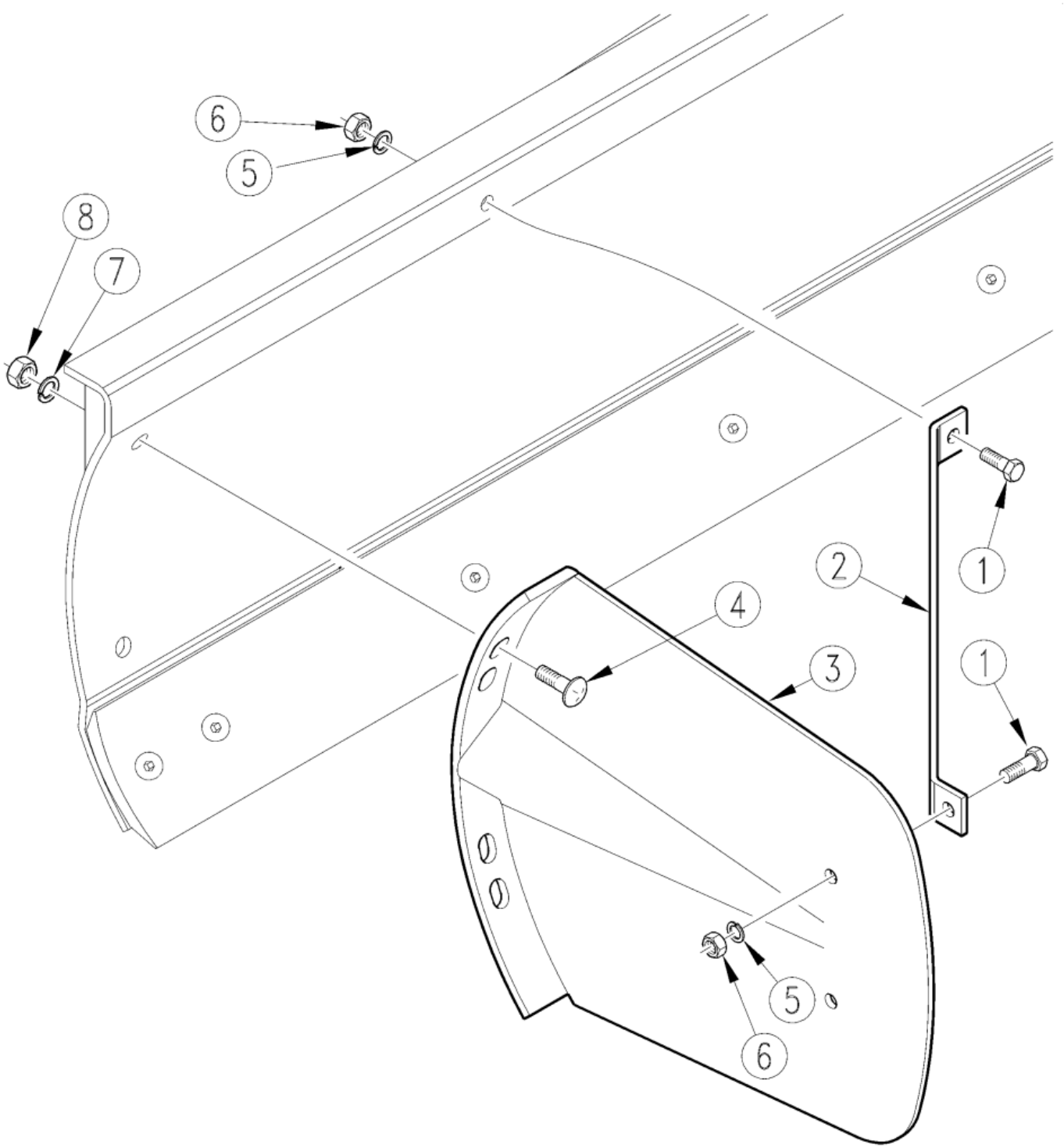

End Plates RBT55 Series

Applies to Models: RBT55108, RBT55120, RBT5596

Ref.	Part No.	Part Description	Comments
	DWG12550	Drawing Image Number	
	301-147A	END PLATES FOR 45/55 SERIES	Includes two of items 2 and 3 and four of items 1 and 4 through 8
1	802-034C	HHCS 1/2-13X1 1/4 GR5	
2	301-208D	SIDE PLATE SUPPORT STRAP	
3	301-159H	BLADE END PLATE	
4	802-088C	RHSNB 5/8-11X2 GR5	
5	804-015C	WASHER LOCK SPRING 1/2 PLT	
6	803-020C	NUT HEX 1/2-13 PLT	
7	804-022C	WASHER LOCK SPRING 5/8 PLT	
8	803-021C	NUT HEX 5/8-11 PLT	

Gauge Wheel Caster RBT45 Series

Applies to Models: RBT45108, RBT4596

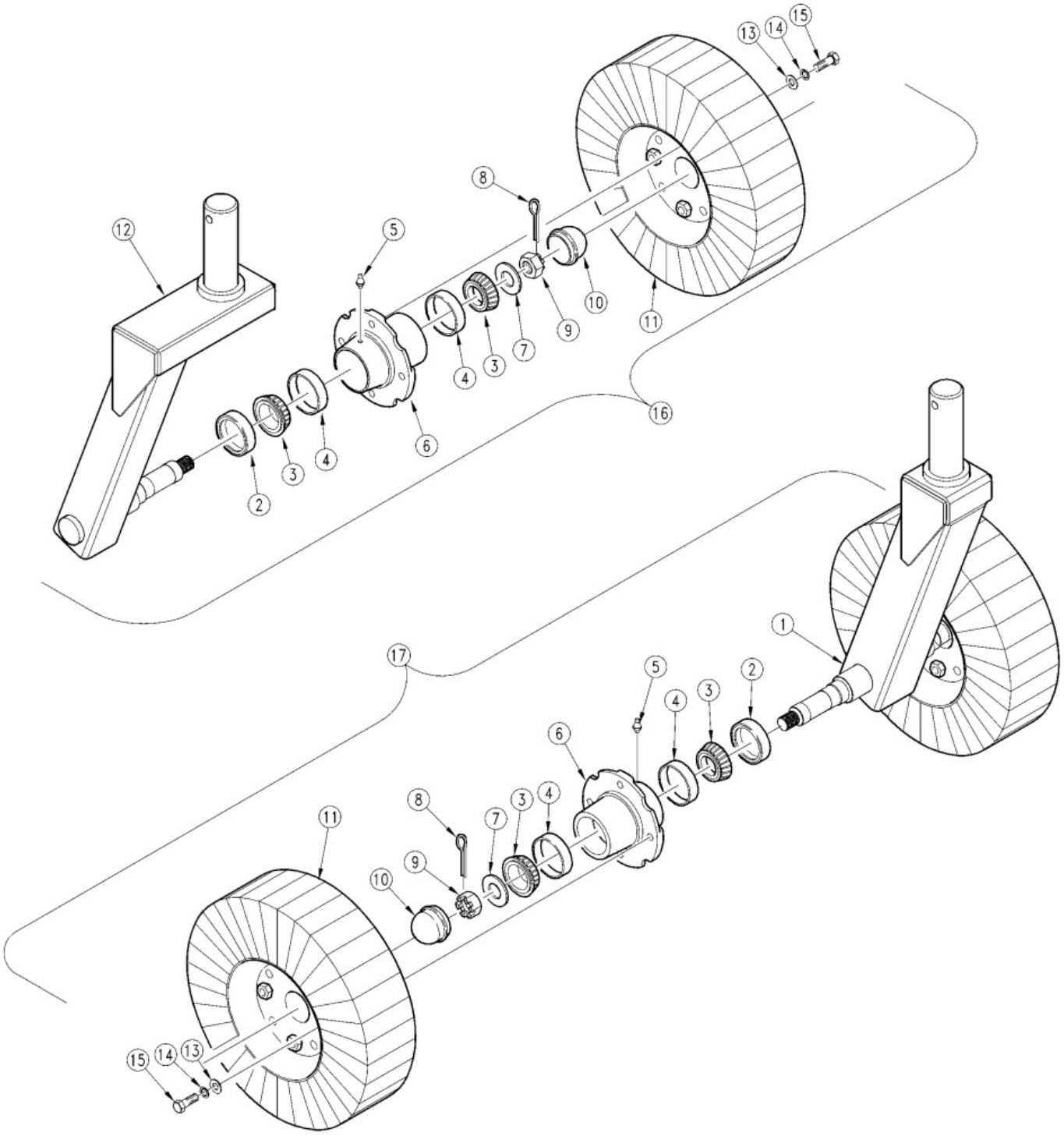

Gauge Wheel Caster RBT45 Series

Applies to Models: RBT45108, RBT4596

Ref.	Part No.	Part Description	Comments
	DWG12908	Drawing Image Number	
1	301-164H	DUAL GW WELDMENT	
2	816-098C	SEAL 1 3/8 ID X 2.441 OD X.313	
3	822-091C	BRG 1.25ID CONE 15123	
4	822-092C	BRG CUP 2.44OD 15245	
5	800-001C	GREASE ZERK STRAIGHT 1/4-28	
6	815-091C	RPBY 815-093C	
7	804-055C	WASHER SPINDLE - 7/8	
8	805-016C	PIN COTTER 3/16 X 1 1/4 PLT	
9	803-029C	NUT HEX SLOTTED 7/8-14 PLT	
10	200-001D	HUB GREASE CAP	
11	814-059C	TIRE & WHEEL LAM. 6X9X21(TALL)	
12	301-163H	SINGLE GW WELDMENT	
13	804-016C	WASHER FLAT 1/2 SAE PLT	
14	804-015C	WASHER LOCK SPRING 1/2 PLT	
15	802-326C	HHCS 1/2-20X1 1/4 GR5	(S/N 336501+) Rev. 2
15	802-240C	HHCS 1/2-20X1 GR5	(S/N 336500-) Rev. 2 not compat. w/Rev. 1
16	301-171K	SINGLE GW CASTER ASSY	
17	301-169K	DUAL GW CASTER ASSY	

Gauge Wheel Caster RBT55 Series

Applies to Models: RBT55108, RBT55120, RBT5596

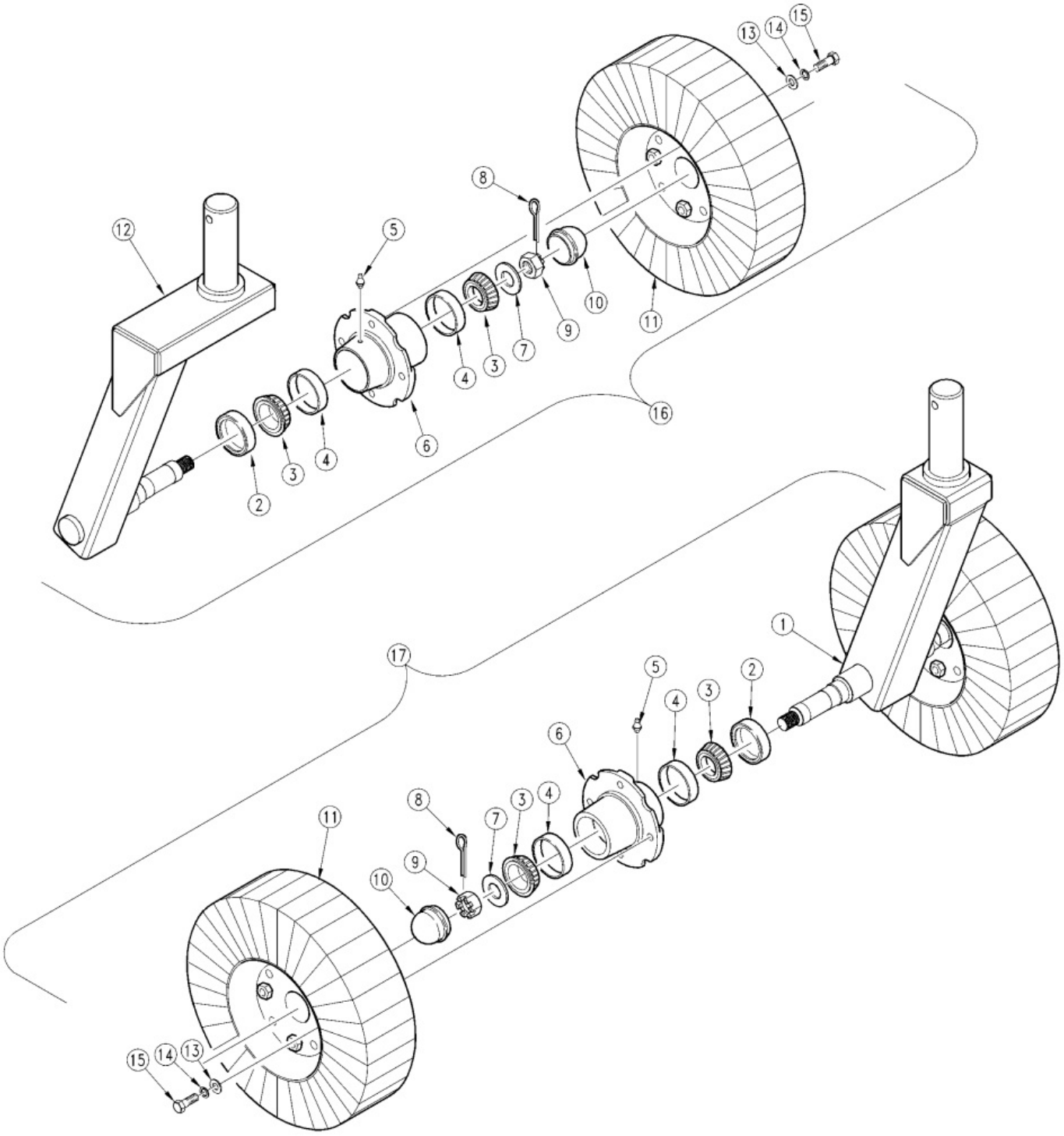

Gauge Wheel Caster RBT55 Series

Applies to Models: RBT55108, RBT55120, RBT5596

Ref.	Part No.	Part Description	Comments
	DWG12908	Drawing Image Number	
1	301-164H	DUAL GW WELDMENT	
2	816-098C	SEAL 1 3/8 ID X 2.441 OD X.313	
3	822-091C	BRG 1.25ID CONE 15123	
4	822-092C	BRG CUP 2.44OD 15245	
5	800-001C	GREASE ZERK STRAIGHT 1/4-28	
6	815-091C	RPBY 815-093C	Rev. 2
6	312-106D	RPBY 815-093C	Rev 1; Use up stock
7	804-055C	WASHER SPINDLE - 7/8	
8	805-016C	PIN COTTER 3/16 X 1 1/4 PLT	
9	803-029C	NUT HEX SLOTTED 7/8-14 PLT	
10	200-001D	HUB GREASE CAP	
11	814-059C	TIRE & WHEEL LAM. 6X9X21(TALL)	
12	301-163H	SINGLE GW WELDMENT	
13	804-016C	WASHER FLAT 1/2 SAE PLT	
14	804-015C	WASHER LOCK SPRING 1/2 PLT	
15	802-326C	HHCS 1/2-20X1 1/4 GR5	Rev. 2
15	802-240C	HHCS 1/2-20X1 GR5	Rev 1; Use up stock
16	301-171K	SINGLE GW CASTER ASSY	
17	301-169K	DUAL GW CASTER ASSY	

Gauge Wheel Dual Manual RBT45 Series

Applies to Models: RBT45108, RBT4596

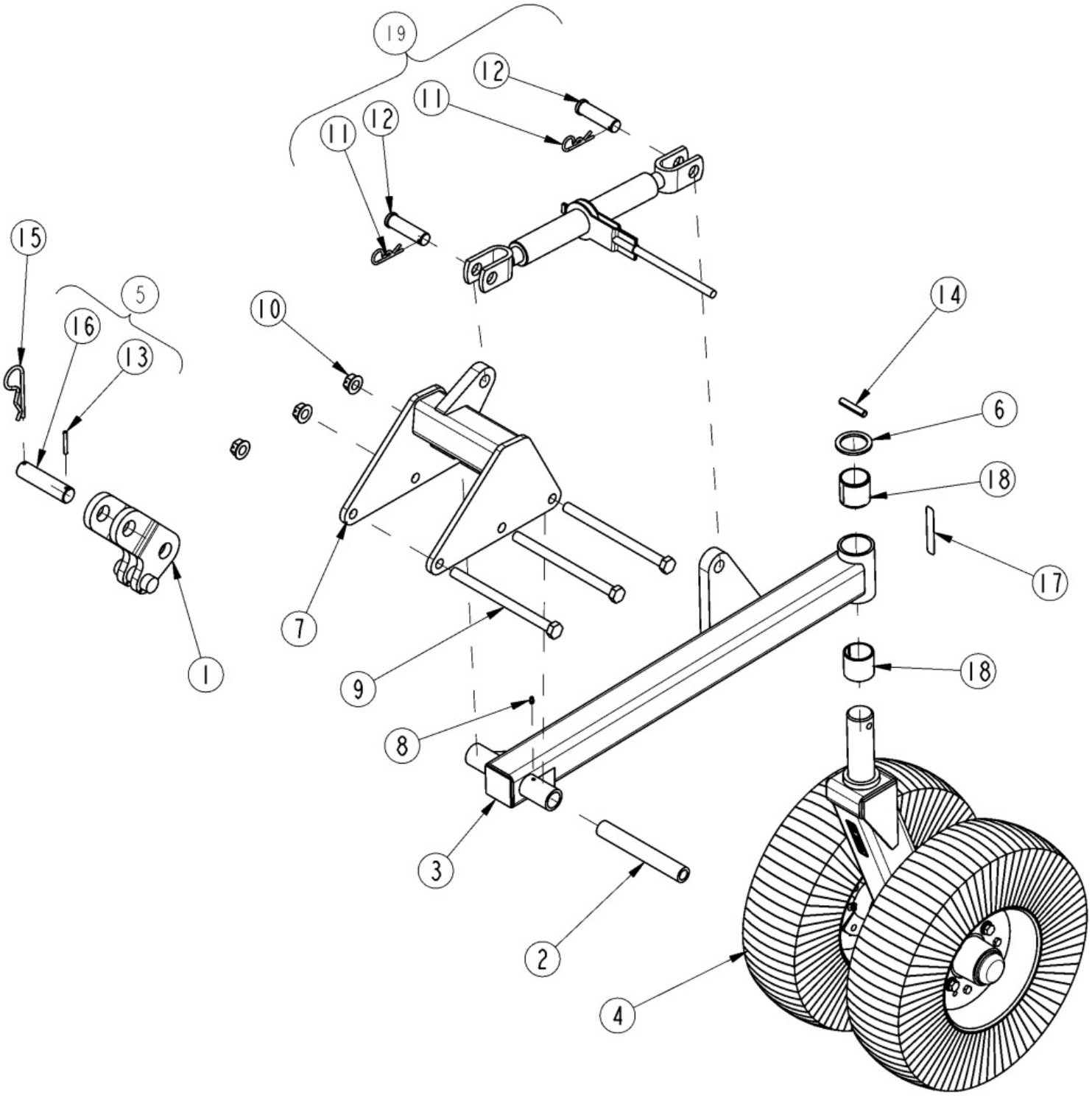

Gauge Wheel Dual Manual RBT45 Series

Applies to Models: RBT45108, RBT4596

Ref.	Part No.	Part Description	Comments
	DWG 25657	Drawing Image Number	
	301-282A	MANUAL DUAL GAUGE WHEEL-T45 *	
1	300-147H	FLOATING TOP LINK	
2	300-361D	GW HITCH TUBE	
3	301-162H	CASTER MT TUBE WELDMENT	
4	301-169K	DUAL GW CASTER ASSY	
5	301-175S	PIN HDLSS 1 1/4X4 1/4USBL ASSY	
6	301-211D	GW RETAINER WASHER	
7	301-224H	T45 GW/FRAME MT WELDMENT	
8	800-080C	GREASE ZERK 1/4-28 THD FORMING	
9	802-397C	HHCS 3/4-10X10 1/2 GR5	
10	803-299C	NUT HEX FLG TOP LK 3/4-10 PLT	
11	805-088C	PIN, HAIR COTTER 3/16 WIRE DIA	
12	805-090C	PIN CLVS 1.0X3.20 USBL	
13	805-146C	PIN ROLL 1/4 X 2 LG PL	
14	805-164C	PIN ROLL 1/2 X 2 1/2 LG PLT	
15	805-167C	PIN HAIR COTTER .243 WIRE PLT	
15	805-040C	RPBY 805-167C	Obsolete
16	805-216C	PIN CLVS HDLS 1.25X4.25 USBL	
17	818-335C	DECAL RED NARROW REFLECTOR	
18	890-051C	BUSHING 2 1/4 OD X 2 ID X 2 LG	
19	890-177C	RATCHET JACK - HEAVY DUT	

Gauge Wheel Dual Manual RBT55 Series

Applies to Models: RBT55108, RBT55120, RBT5596

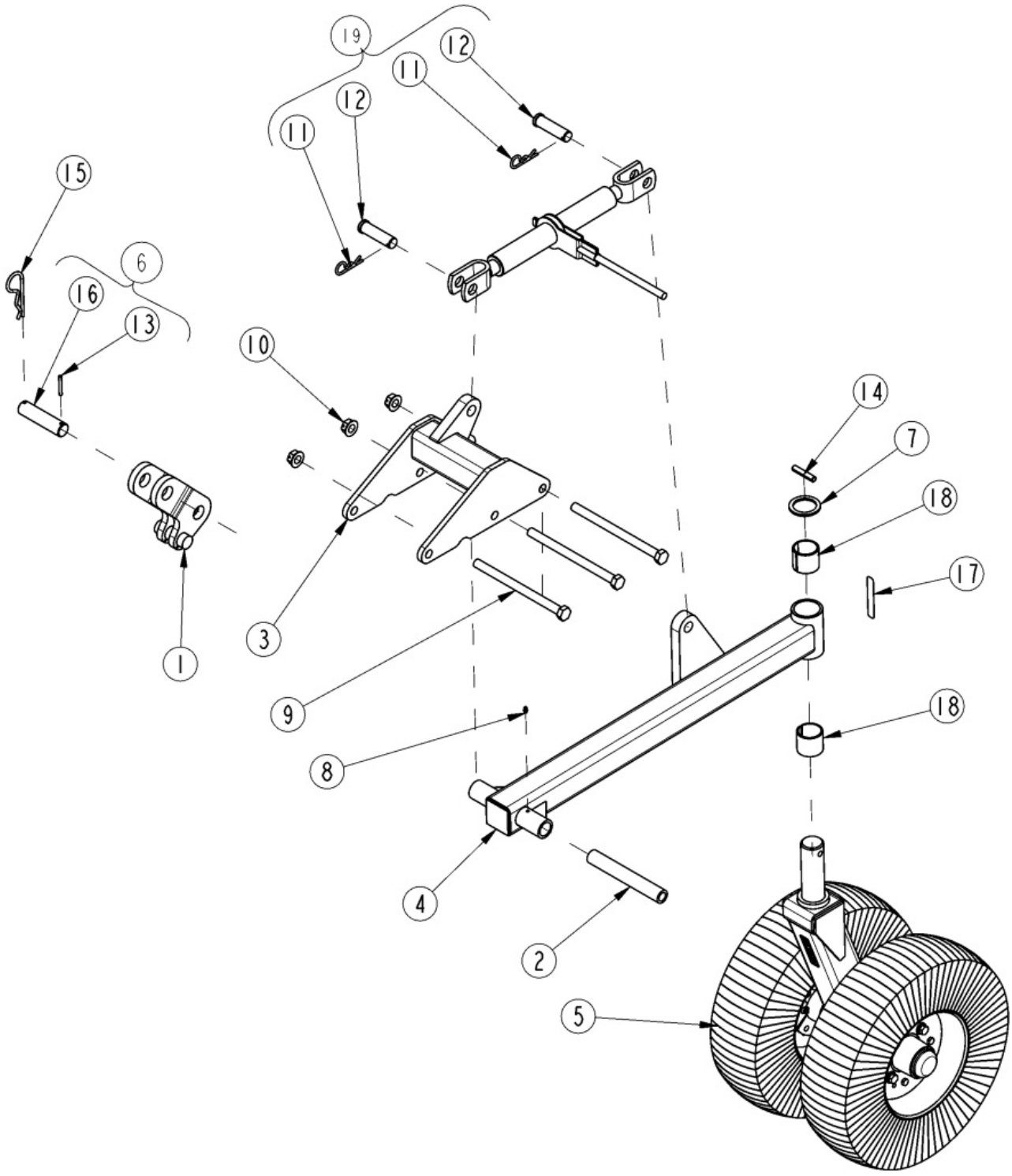

Gauge Wheel Dual Manual RBT55 Series

Applies to Models: RBT55108, RBT55120, RBT5596

Ref.	Part No.	Part Description	Comments
	DWG 25659	Drawing Image Number	
	301-284A	MANUAL DUAL GAUGE WHEEL-55 *	
1	300-147H	FLOATING TOP LINK	
2	300-361D	GW HITCH TUBE	
3	301-160H	GW/FRAME MT WELDMENT	
4	301-162H	CASTER MT TUBE WELDMENT	
5	301-169K	DUAL GW CASTER ASSY	
6	301-175S	PIN HDLSS 1 1/4X4 1/4USBL ASSY	
7	301-211D	GW RETAINER WASHER	
8	800-080C	GREASE ZERK 1/4-28 THD FORMING	
9	802-397C	HHCS 3/4-10X10 1/2 GR5	
10	803-299C	NUT HEX FLG TOP LK 3/4-10 PLT	
11	805-088C	PIN, HAIR COTTER 3/16 WIRE DIA	
12	805-090C	PIN CLVS 1.0X3.20 USBL	
13	805-146C	PIN ROLL 1/4 X 2 LG PL	
14	805-164C	PIN ROLL 1/2 X 2 1/2 LG PLT	
15	805-167C	PIN HAIR COTTER .243 WIRE PLT	
15	805-040C	RPBY 805-167C	Obsolete
16	805-216C	PIN CLVS HDLS 1.25X4.25 USBL	
17	818-335C	DECAL RED NARROW REFLECTOR	
18	890-051C	BUSHING 2 1/4 OD X 2 ID X 2 LG	
19	890-177C	RATCHET JACK - HEAVY DUT	

Gauge Wheel Hydraulic RBT45 Series

Applies to Models: RBT45108, RBT4596

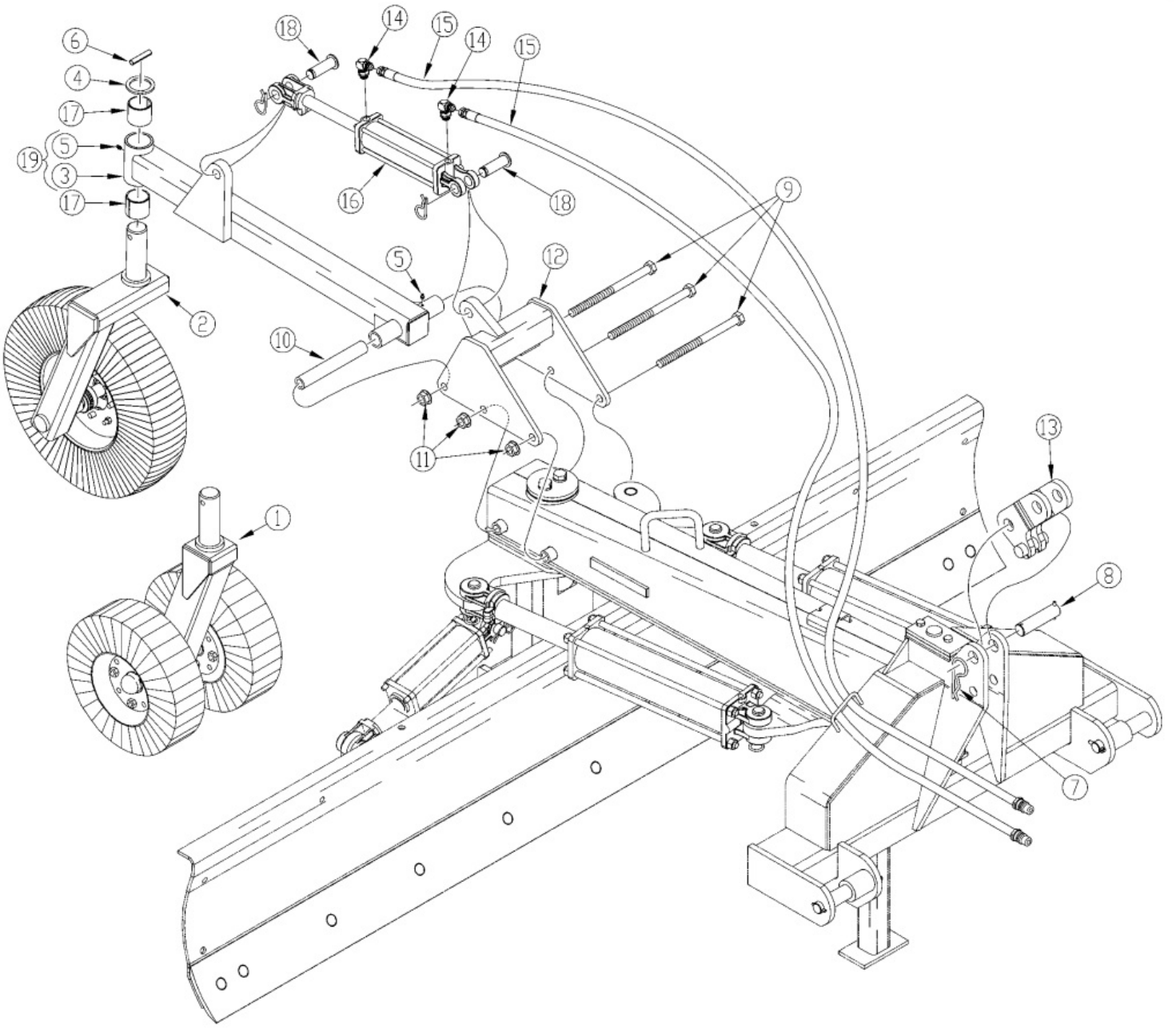

Gauge Wheel Hydraulic RBT45 Series

Applies to Models: RBT45108, RBT4596

Ref.	Part No.	Part Description	Comments
	DWG 18904	Drawing Image Number	
	301-225A	HYD. SINGLE GAUGE WHEEL - T45	
	301-236A	HYD. DOUBLE GAUGE WHEEL - T45	
1	301-169K	DUAL GW CASTER ASSY	Refer to page 5-6
2	301-171K	SINGLE GW CASTER ASSY	Refer to page 5-6
3	301-162H	CASTER MT TUBE WELDMENT	
4	301-211D	GW RETAINER WASHER	
5	800-080C	GREASE ZERK 1/4-28 THD FORMING	
6	805-164C	PIN ROLL 1/2 X 2 1/2 LG PLT	
7	805-167C	PIN HAIR COTTER .243 WIRE PLT	
7	805-040C	RPBY 805-167C	Obsolete
8	301-175S	PIN HDLSS 1 1/4X4 1/4USBL ASSY	
9	802-397C	HHCS 3/4-10X10 1/2 GR5	
10	300-361D	GW HITCH TUBE	
11	803-299C	NUT HEX FLG TOP LK 3/4-10 PLT	
12	301-224H	T45 GW/FRAME MT WELDMENT	
13	300-147H	FLOATING TOP LINK	
14	811-063C	EL 3/4MJIC 3/4MORB	
15	811-247C	HH3/8R2 116 3/4FJIC	
16	810-195C	CYL 3X8X1.25 ROD (TIE) NO PINS	Refer to page 5-7 & 5-8
17	890-051C	BUSHING 2 1/4 OD X 2 ID X 2 LG	
18	805-004C	PIN CLVS 1.0X2.75 USBL	
19	301-170S	CASTER MT TUBE ASSY	Includes items 3 & 5

Gauge Wheel Hydraulic RBT55 Series

Applies to Models: RBT55108, RBT55120, RBT5596

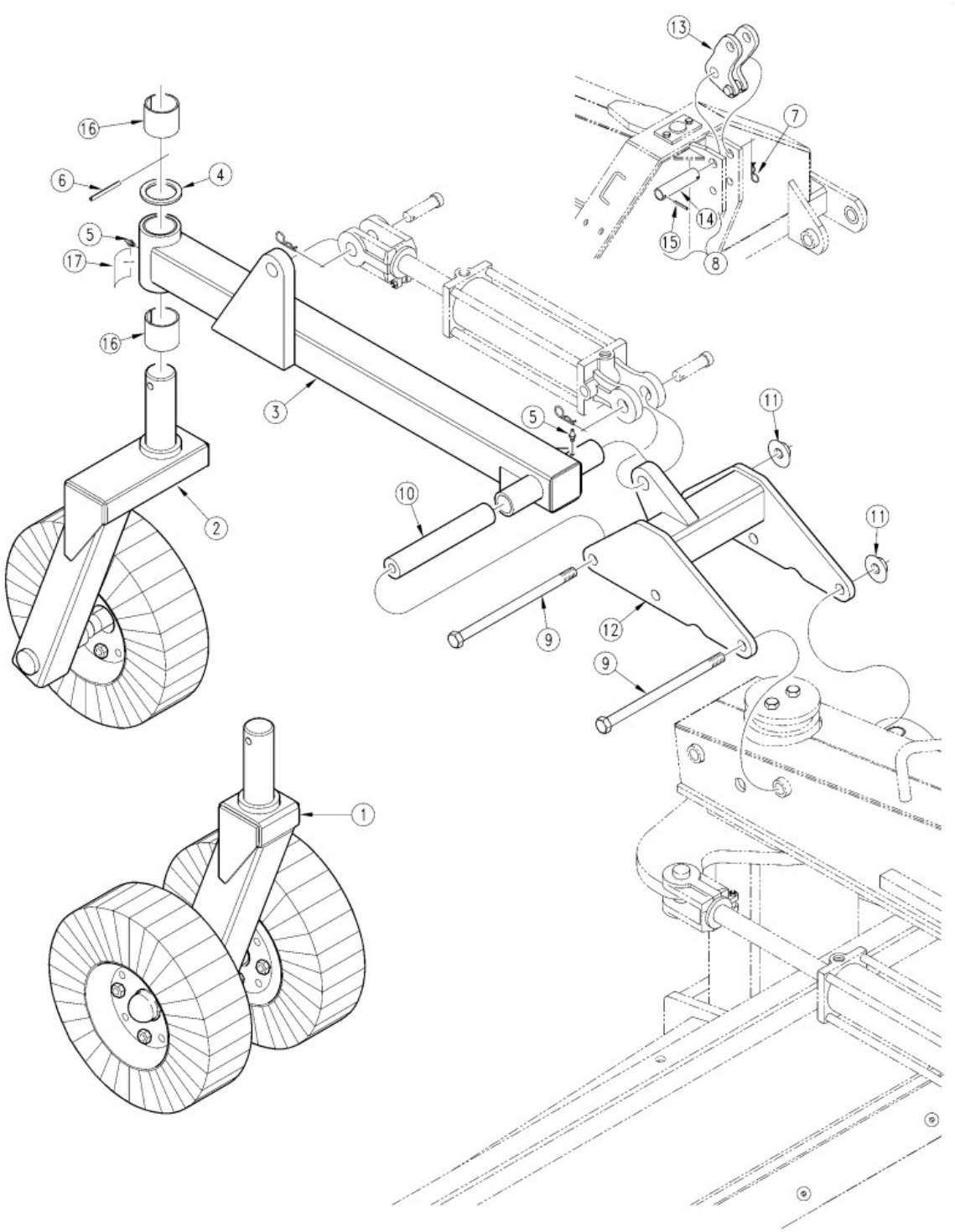

Gauge Wheel Hydraulic RBT55 Series

Applies to Models: RBT55108, RBT55120, RBT5596

Ref.	Part No.	Part Description	Comments
	DWG 12495	Drawing Image Number	
1	301-169K	DUAL GW CASTER ASSY	
2	301-171K	SINGLE GW CASTER ASSY	
3	301-162H	CASTER MT TUBE WELDMENT	
4	301-211D	GW RETAINER WASHER	
5	800-080C	GREASE ZERK 1/4-28 THD FORMING	
6	805-164C	PIN ROLL 1/2 X 2 1/2 LG PLT	
7	805-167C	PIN HAIR COTTER .243 WIRE PLT	
7	805-040C	RPBY 805-167C	Obsolete
8	301-175S	PIN HDLSS 1 1/4X4 1/4USBL ASSY	Includes one of Items 14 & 15
9	802-397C	HHCS 3/4-10X10 1/2 GR5	
10	300-361D	GW HITCH TUBE	
11	803-299C	NUT HEX FLG TOP LK 3/4-10 PLT	
12	301-160H	GW/FRAME MT WELDMENT	
13	300-147H	FLOATING TOP LINK	
14	805-216C	PIN CLVS HDLS 1.25X4.25 USBL	
15	805-146C	PIN ROLL 1/4 X 2 LG PL	
16	890-051C	BUSHING 2 1/4 OD X 2 ID X 2 LG	
17	818-335C	DECAL RED NARROW REFLECTOR	

Gauge Wheel Single Manual RBT45 Series

Applies to Models: RBT45108, RBT4596

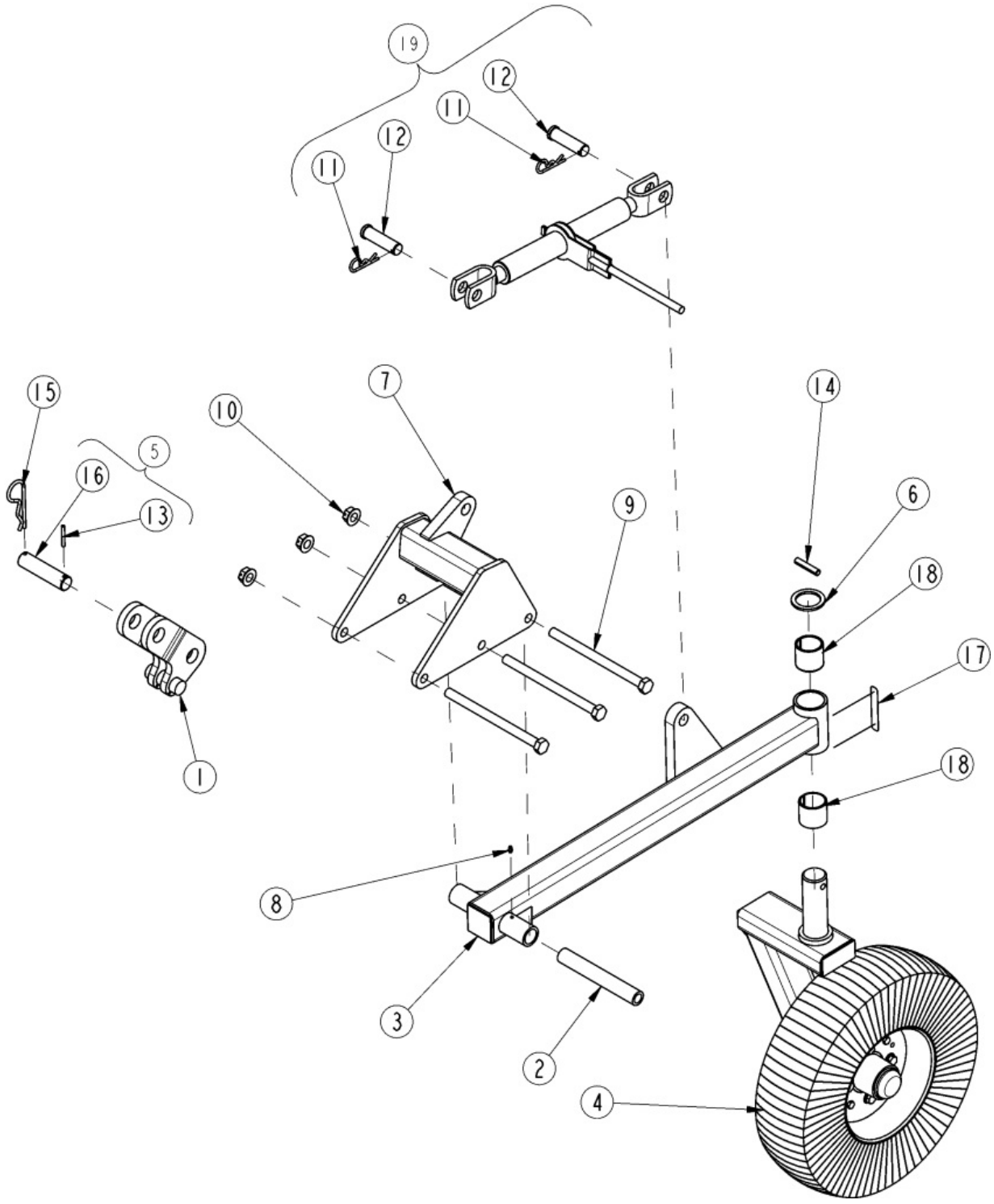

Gauge Wheel Single Manual RBT45 Series

Applies to Models: RBT45108, RBT4596

Ref.	Part No.	Part Description	Comments
	DWG 25656	Drawing Image Number	
	301-281A	MANUAL SINGLE GAUGE WHEEL-T45 *	
1	300-147H	FLOATING TOP LINK	
2	300-361D	GW HITCH TUBE	
3	301-162H	CASTER MT TUBE WELDMENT	
4	301-171K	SINGLE GW CASTER ASSY	
5	301-175S	PIN HDLSS 1 1/4X4 1/4USBL ASSY	
6	301-211D	GW RETAINER WASHER	
7	301-224H	T45 GW/FRAME MT WELDMENT	
8	800-080C	GREASE ZERK 1/4-28 THD FORMING	
9	802-397C	HHCS 3/4-10X10 1/2 GR5	
10	803-299C	NUT HEX FLG TOP LK 3/4-10 PLT	
11	805-088C	PIN, HAIR COTTER 3/16 WIRE DIA	
12	805-090C	PIN CLVS 1.0X3.20 USBL	
13	805-146C	PIN ROLL 1/4 X 2 LG PL	
14	805-164C	PIN ROLL 1/2 X 2 1/2 LG PLT	
15	805-167C	PIN HAIR COTTER .243 WIRE PLT	
15	805-040C	RPBY 805-167C	Obsolete
16	805-216C	PIN CLVS HDLS 1.25X4.25 USBL	
17	818-335C	DECAL RED NARROW REFLECTOR	
18	890-051C	BUSHING 2 1/4 OD X 2 ID X 2 LG	
19	890-177C	RATCHET JACK - HEAVY DUT	

Gauge Wheel Single Manual RBT55 Series

Applies to Models: RBT55108, RBT55120, RBT5596

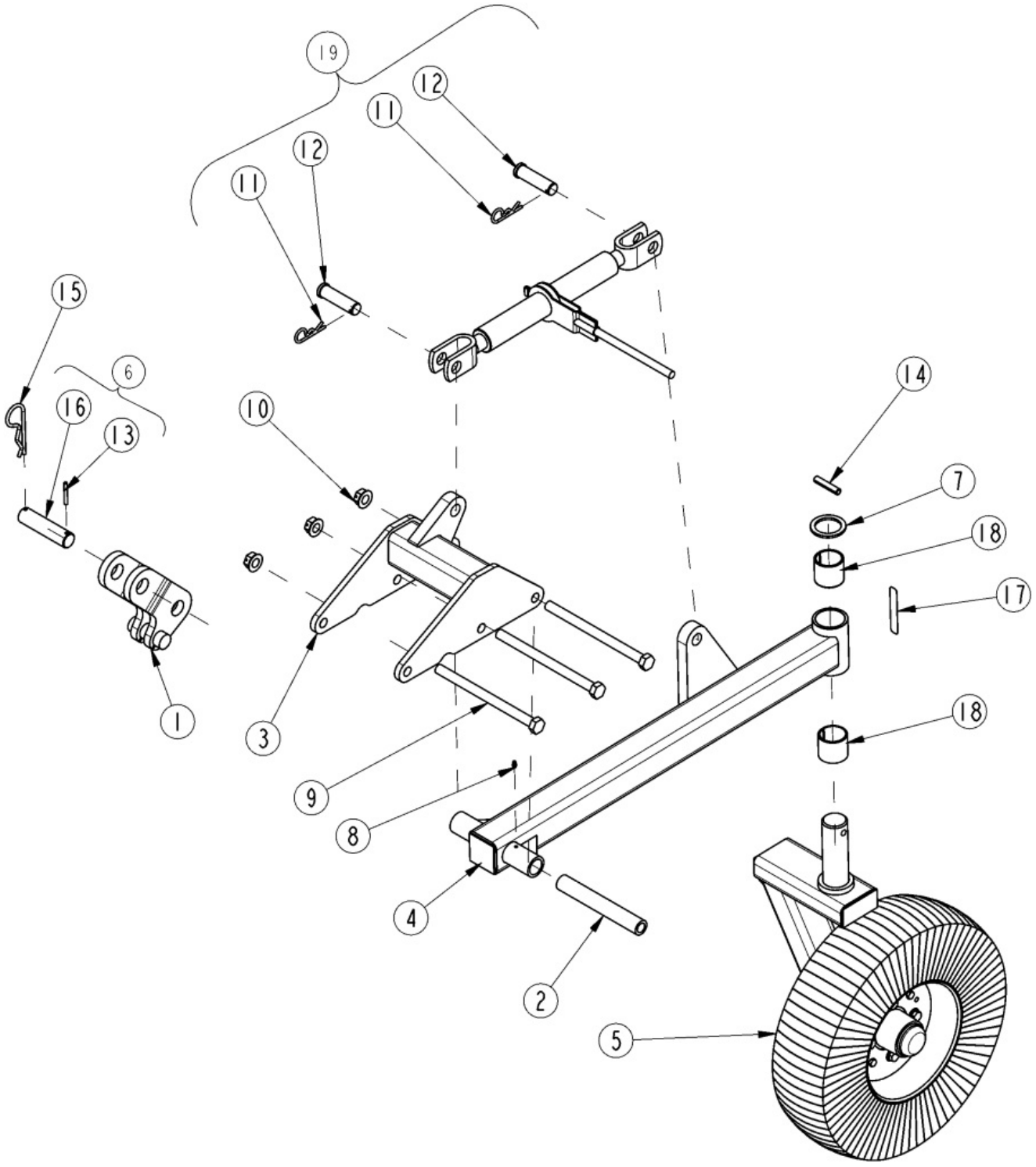

Gauge Wheel Single Manual RBT55 Series

Applies to Models: RBT55108, RBT55120, RBT5596

Ref.	Part No.	Part Description	Comments
	DWG 25658	Drawing Image Number	
	301-283A	MANUAL SINGLE GAUGE WHEEL-55 *	
1	300-147H	FLOATING TOP LINK	
2	300-361D	GW HITCH TUBE	
3	301-160H	GW/FRAME MT WELDMENT	
4	301-162H	CASTER MT TUBE WELDMENT	
5	301-171K	SINGLE GW CASTER ASSY	
6	301-175S	PIN HDLSS 1 1/4X4 1/4USBL ASSY	
7	301-211D	GW RETAINER WASHER	
8	800-080C	GREASE ZERK 1/4-28 THD FORMING	
9	802-397C	HHCS 3/4-10X10 1/2 GR5	
10	803-299C	NUT HEX FLG TOP LK 3/4-10 PLT	
11	805-088C	PIN, HAIR COTTER 3/16 WIRE DIA	
12	805-090C	PIN CLVS 1.0X3.20 USBL	
13	805-146C	PIN ROLL 1/4 X 2 LG PL	
14	805-164C	PIN ROLL 1/2 X 2 1/2 LG PLT	
15	805-167C	PIN HAIR COTTER .243 WIRE PLT	
15	805-040C	RPBY 805-167C	Obsolete
16	805-216C	PIN CLVS HDLS 1.25X4.25 USBL	
17	818-335C	DECAL RED NARROW REFLECTOR	
18	890-051C	BUSHING 2 1/4 OD X 2 ID X 2 LG	
19	890-177C	RATCHET JACK - HEAVY DUT	

Hydraulic Cushion Valve RBT40 Series

Applies to Models: RBT40108, RBT4084, RBT4096

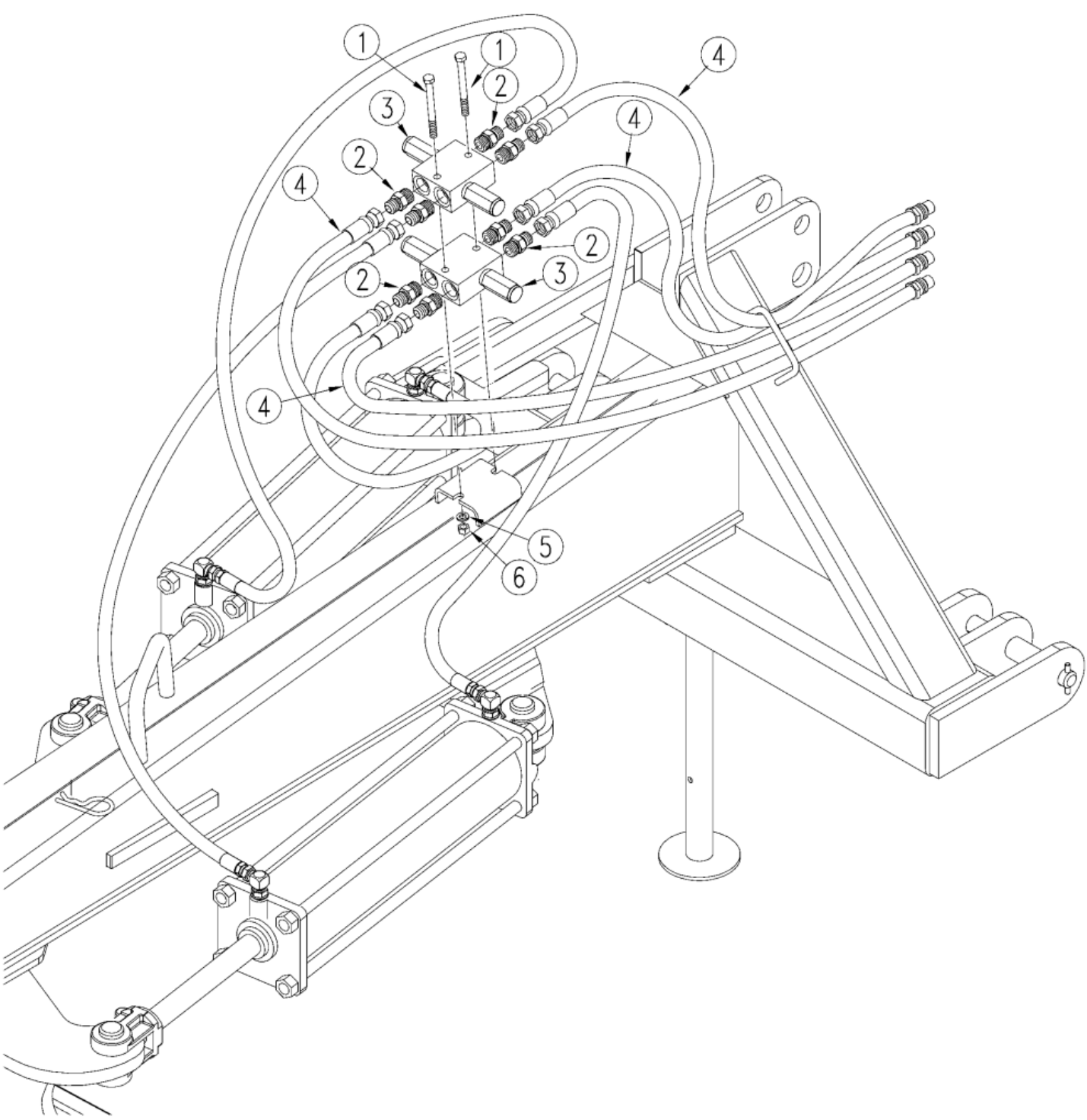

Hydraulic Cushion Valve RBT40 Series

Applies to Models: RBT40108, RBT4084, RBT4096

Ref.	Part No.	Part Description	Comments
	DWG17730	Drawing Image Number	
	301-187A	RBT40108 CYL. CUSH. VALVE	
	301-208A	RBT4084 & 96 CYL. CUSH. VALVE	
1	802-223C	HHCS 3/8-16X4 GR5	
2	811-192C	AD 3/4MJIC 7/8MORB	
3	810-385C	VALVE CYLINDER CUSHION 1600PSI	RBT4084 & RBT4096
3	810-391C	VALVE CYLINDER CUSHION 1800PSI	RBT40108
4	811-685C	HH3/8R2 048 3/4FJIC 3/4FJIC	
5	804-013C	WASHER LOCK SPRING 3/8 PLT	
6	803-014C	NUT HEX 3/8-16 PLT	

Hydraulic Cushion Valve RBT45 Series

Applies to Models: RBT45108, RBT4596

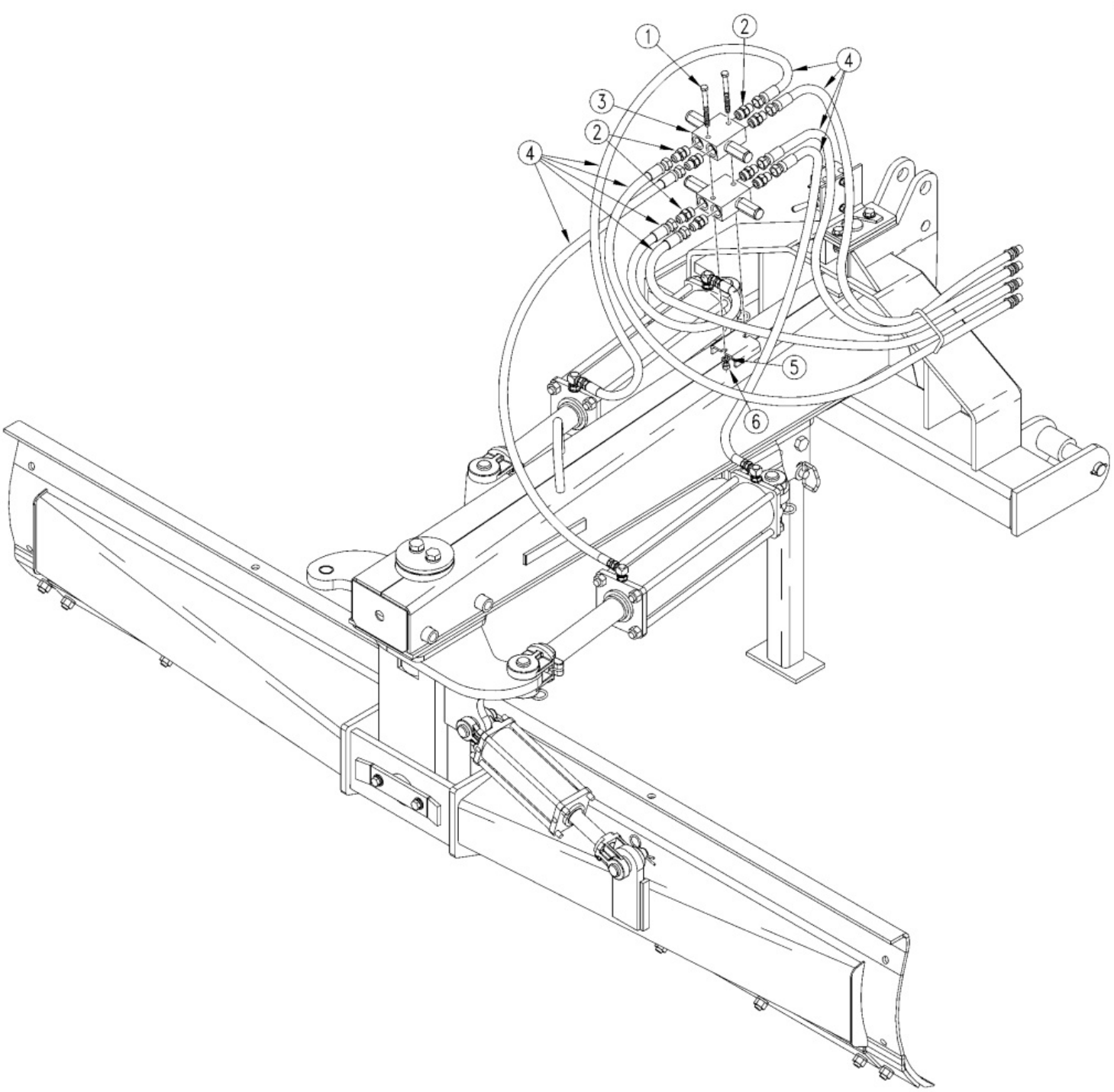

Hydraulic Cushion Valve RBT45 Series

Applies to Models: RBT45108, RBT4596

Ref.	Part No.	Part Description	Comments
	DWG 18903	Drawing Image Number	
	301-234A	RBT45108 CYL. CUSH. VALVE	Obsolete
	301-235A	RBT4596 CYL. CUSH. VALVE	
		*	
1	802-223C	HHCS 3/8-16X4 GR5	
2	811-192C	AD 3/4MJIC 7/8MORB	
3	810-417C	VALVE CYLINDER CUSHION 2200PSI	RBT45108
3	810-418C	VALVE CYLINDER CUSHION 2000PSI	RBT4596
4	811-685C	HH3/8R2 048 3/4FJIC 3/4FJIC	
5	804-013C	WASHER LOCK SPRING 3/8 PLT	
6	803-014C	NUT HEX 3/8-16 PLT	

Hydraulic Selector Valve RBT40 Series

Applies to Models: RBT40108, RBT4084, RBT4096

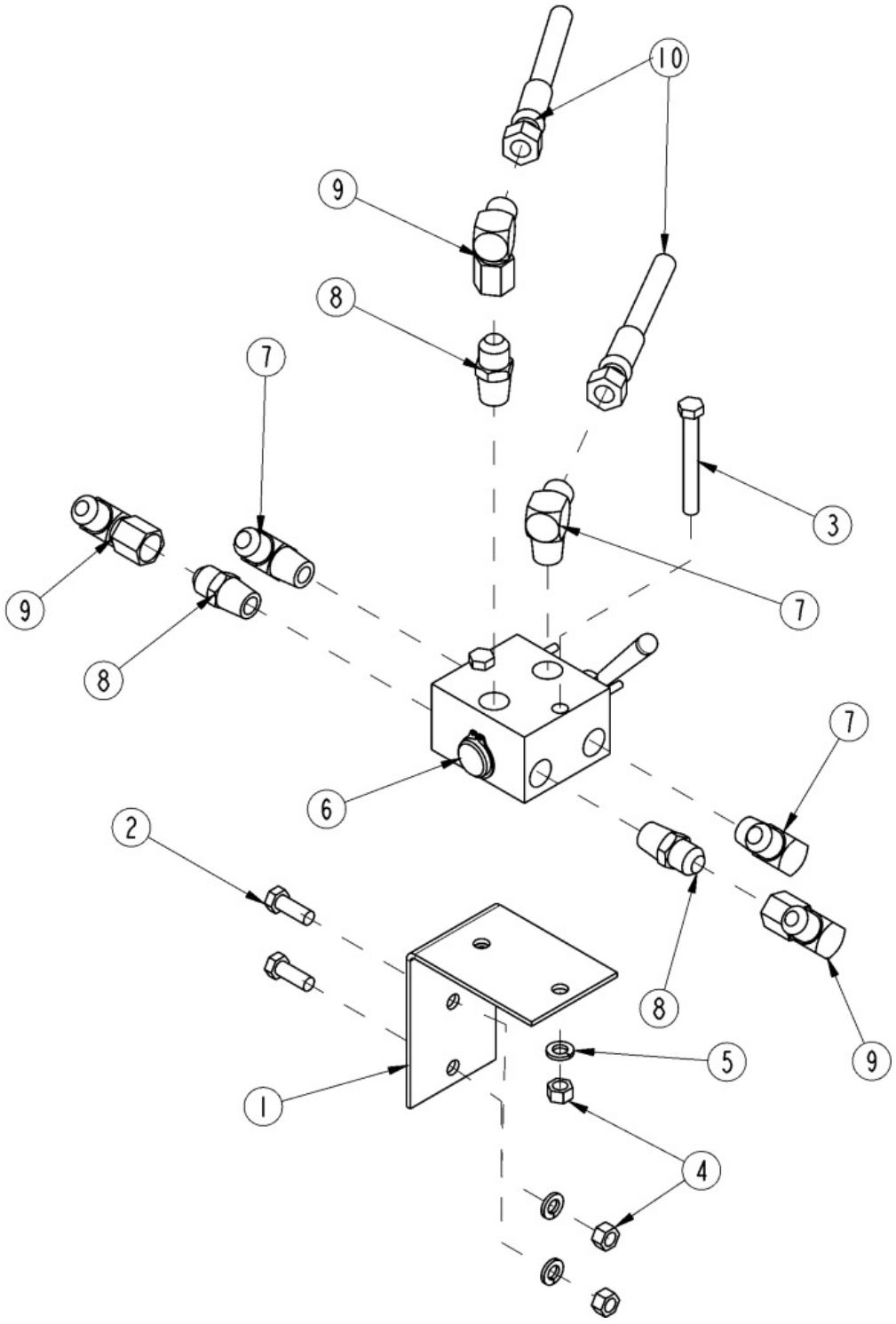

Hydraulic Selector Valve RBT40 Series

Applies to Models: RBT40108, RBT4084, RBT4096

Ref.	Part No.	Part Description	Comments
	DWG25655	Drawing Image Number	
	301-188A	RBT40 CONTROL VALVE *	
1	301-250D	SELECTOR VALVE BRACKET	
2	802-017C	HHCS 3/8-16X1 GR5	
3	802-024C	HHCS 3/8-16X3 GR5	
4	803-014C	NUT HEX 3/8-16 PLT	
5	804-013C	WASHER LOCK SPRING 3/8 PLT	
6	810-023C	DOUBLE SELECTOR VALVE	
7	811-038C	EL 3/4MJIC 1/2MNPT	
8	811-041C	AD 3/4MJIC 1/2MNPT	New Style
9	811-150C	EL 3/4FJIC 3/4MJIC	New Style
9	811-038C	EL 3/4MJIC 1/2MNPT	Old Style
10	811-386C	HH3/8R2 036 3/4FJIC	

Hydraulic Selector Valve RBT45 Series

Applies to Models: RBT45108, RBT4596

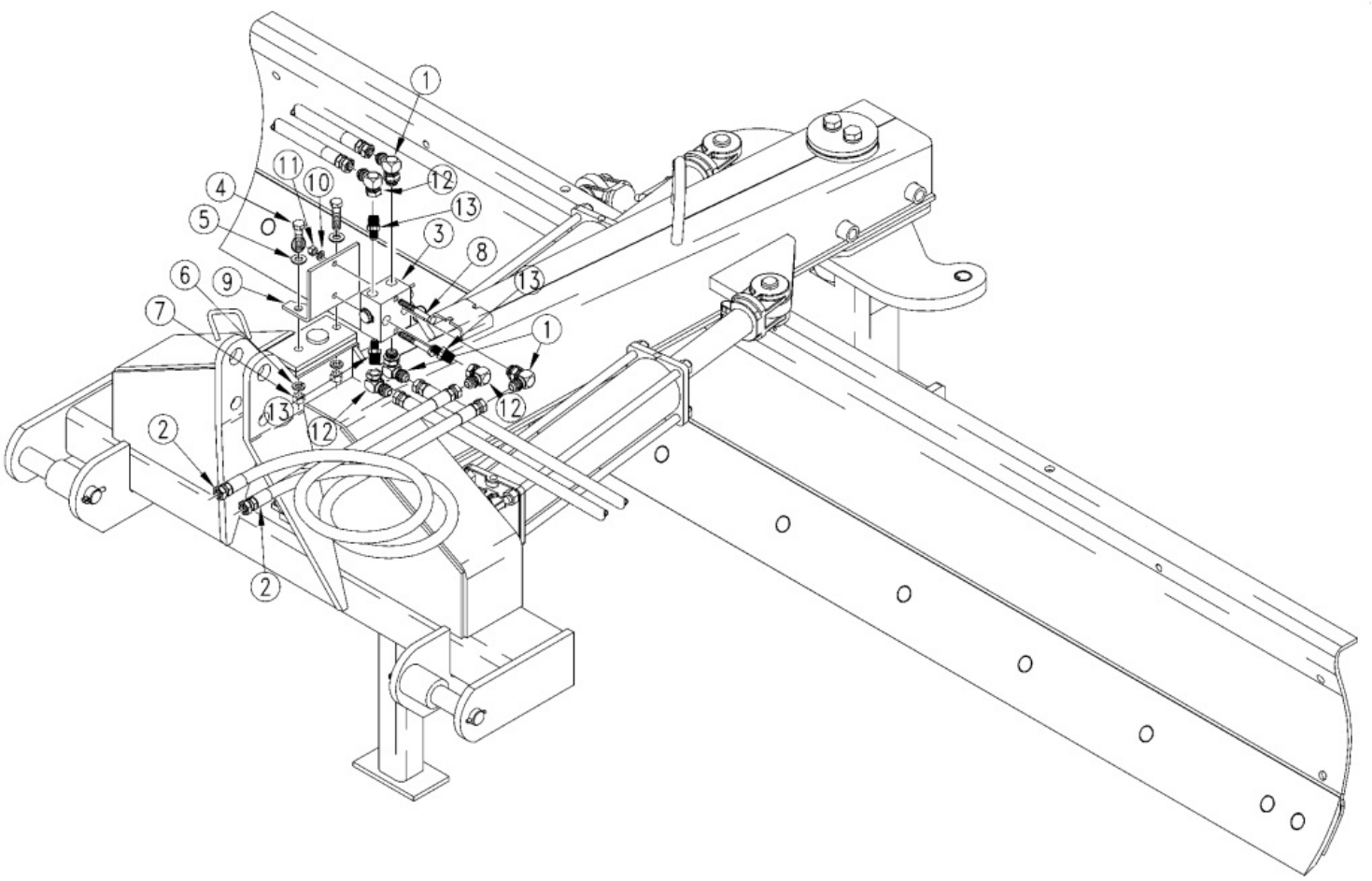

Hydraulic Selector Valve RBT45 Series

Applies to Models: RBT45108, RBT4596

Ref.	Part No.	Part Description	Comments
	DWG18902	Drawing Image Number	
	301-227A	RBT45 CONTROL VALVE	
1	811-038C	EL 3/4MJIC 1/2MNPT	
2	811-386C	HH3/8R2 036 3/4FJIC	
3	810-023C	DOUBLE SELECTOR VALVE	
4	802-128C	HHCS 1/2-13X2 GR5	
5	804-016C	WASHER FLAT 1/2 SAE PLT	
6	804-015C	WASHER LOCK SPRING 1/2 PLT	
7	803-020C	NUT HEX 1/2-13 PLT	
8	802-024C	HHCS 3/8-16X3 GR5	
9	301-255D	T45 SELECTOR VALVE BKT	
10	804-013C	WASHER LOCK SPRING 3/8 PLT	
11	803-014C	NUT HEX 3/8-16 PLT	
12	811-150C	EL 3/4FJIC 3/4MJIC	
13	811-041C	AD 3/4MJIC 1/2MNPT	

Hydraulic Selector Valve RBT55 Series

Applies to Models: RBT55108, RBT55120, RBT5596

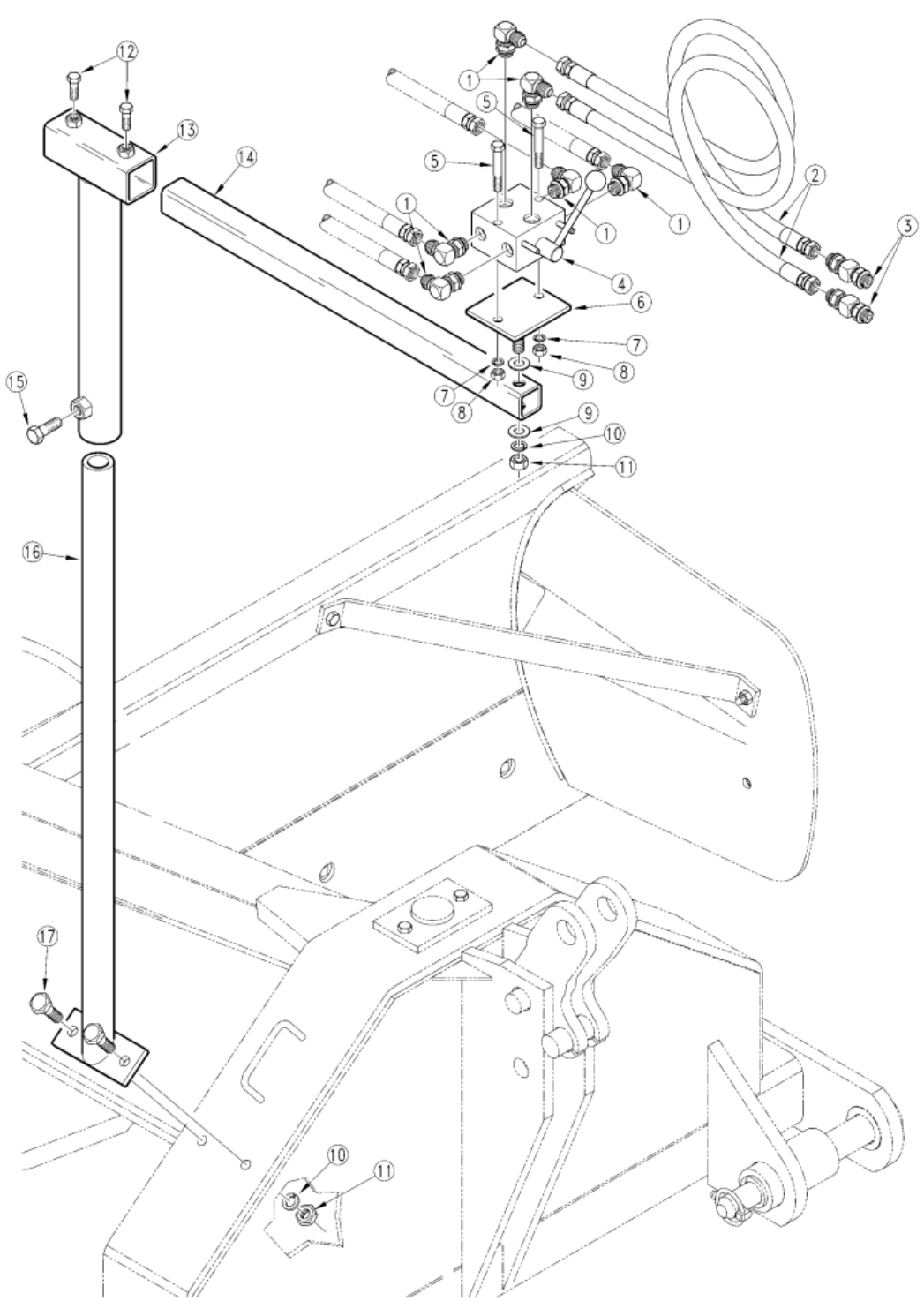

Hydraulic Selector Valve RBT55 Series

Applies to Models: RBT55108, RBT55120, RBT5596

Ref.	Part No.	Part Description	Comments
	DWG15168	Drawing Image Number	
	300-154A	DOUBLE SELECTOR VALVE ASSY	Includes one of items 4; 6; 13 through 16; two of items 2; 3; 5; 7; 8; 9; 12 and 17 three of items 10 and 11 and six of item 1
1	811-038C	EL 3/4MJIC 1/2MNPT	
2	811-245C	HH3/8R2 074 3/4FJIC	
3	811-088C	AD 3/4MORB 3/4MJIC	
4	810-023C	DOUBLE SELECTOR VALVE	
5	802-024C	HHCS 3/8-16X3 GR5	
6	314-071H	DIVERTER VLV BASE PLT	
7	804-013C	WASHER LOCK SPRING 3/8 PLT	
8	803-014C	NUT HEX 3/8-16 PLT	
9	804-016C	WASHER FLAT 1/2 SAE PLT	
10	804-015C	WASHER LOCK SPRING 1/2 PLT	
11	803-020C	NUT HEX 1/2-13 PLT	
12	802-014C	HHCS 3/8-16X3/4 GR5	
13	314-070H	DIVERTER VALVE ADJ TB ASSEMBLY	
14	314-107D	DIVERTER VALVE EXT ARM	
15	802-032C	HHCS 1/2-13X3/4 GR5	
16	300-156H	DIVERTER VALVE STAND	
17	802-082C	HHCS 1/2-13X1 3/4 GR5 FTHD	

Manual Offset, Angling And Tilt RBT55 Series

Applies to Models: RBT55108, RBT55120, RBT5596

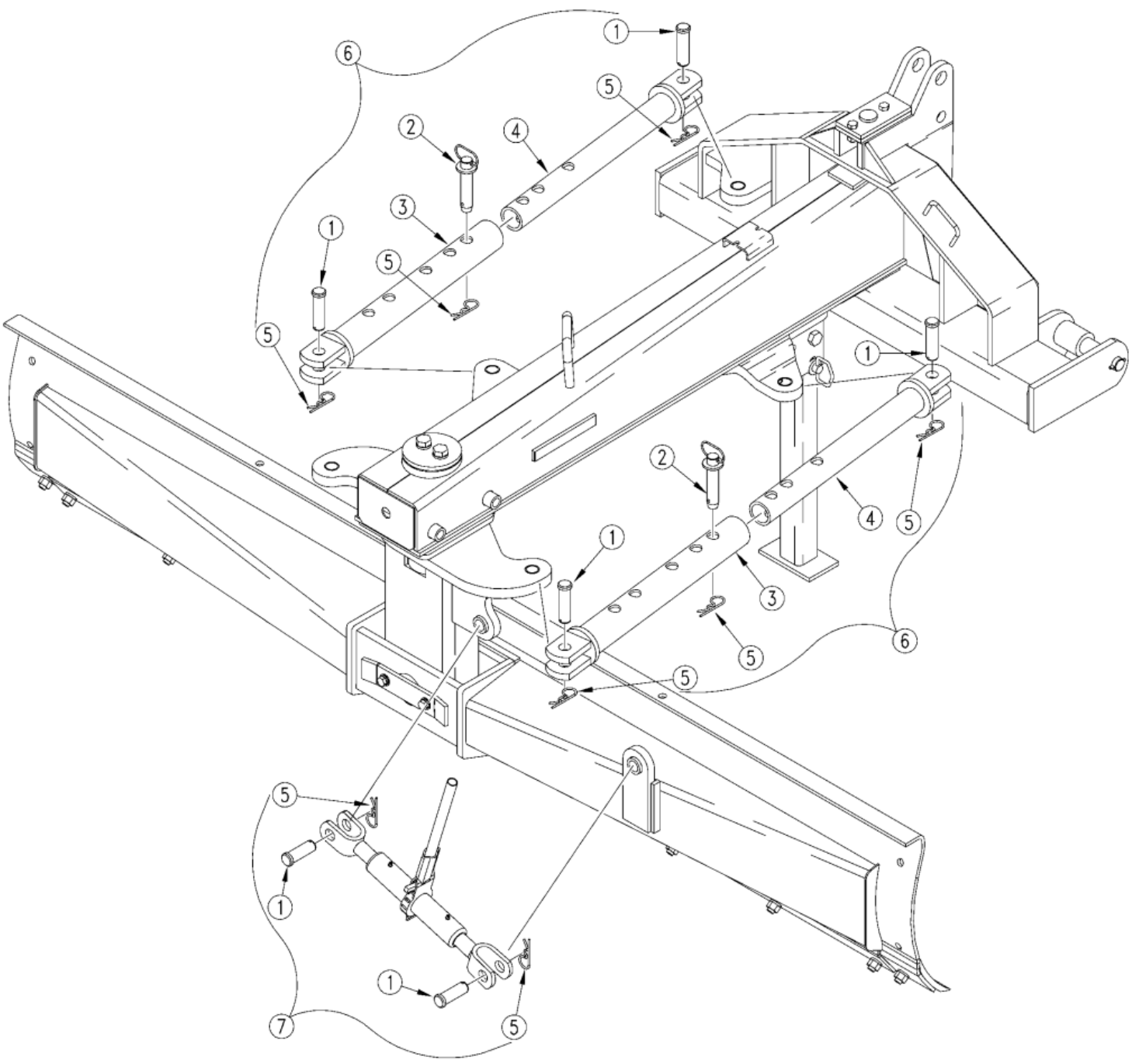

Manual Offset, Angling And Tilt RBT55 Series

Applies to Models: RBT55108, RBT55120, RBT5596

Ref.	Part No.	Part Description	Comments
	DWG 18899	Drawing Image Number	
1	805-090C	PIN CLVS 1.0X3.20 USBL	
2	805-007C	PIN HTCH 1.0X3.38 USBL W/PIN	
3	300-207H	T45 LINK, MANUAL WELD.-FEMALE	
4	300-146H	LINK, MANUAL WELDMENT-MALE	
5	805-088C	PIN, HAIR COTTER 3/16 WIRE DIA	
6	300-206A	T45 MAN OFFSET & ANGL LINK ASM	
7	890-177C	RATCHET JACK - HEAVY DUT	

Skid Shoes RBT40 & RBT45 Series

Applies to Models: RBT45108, RBT4596, RBT40108, RBT4084, RBT4096

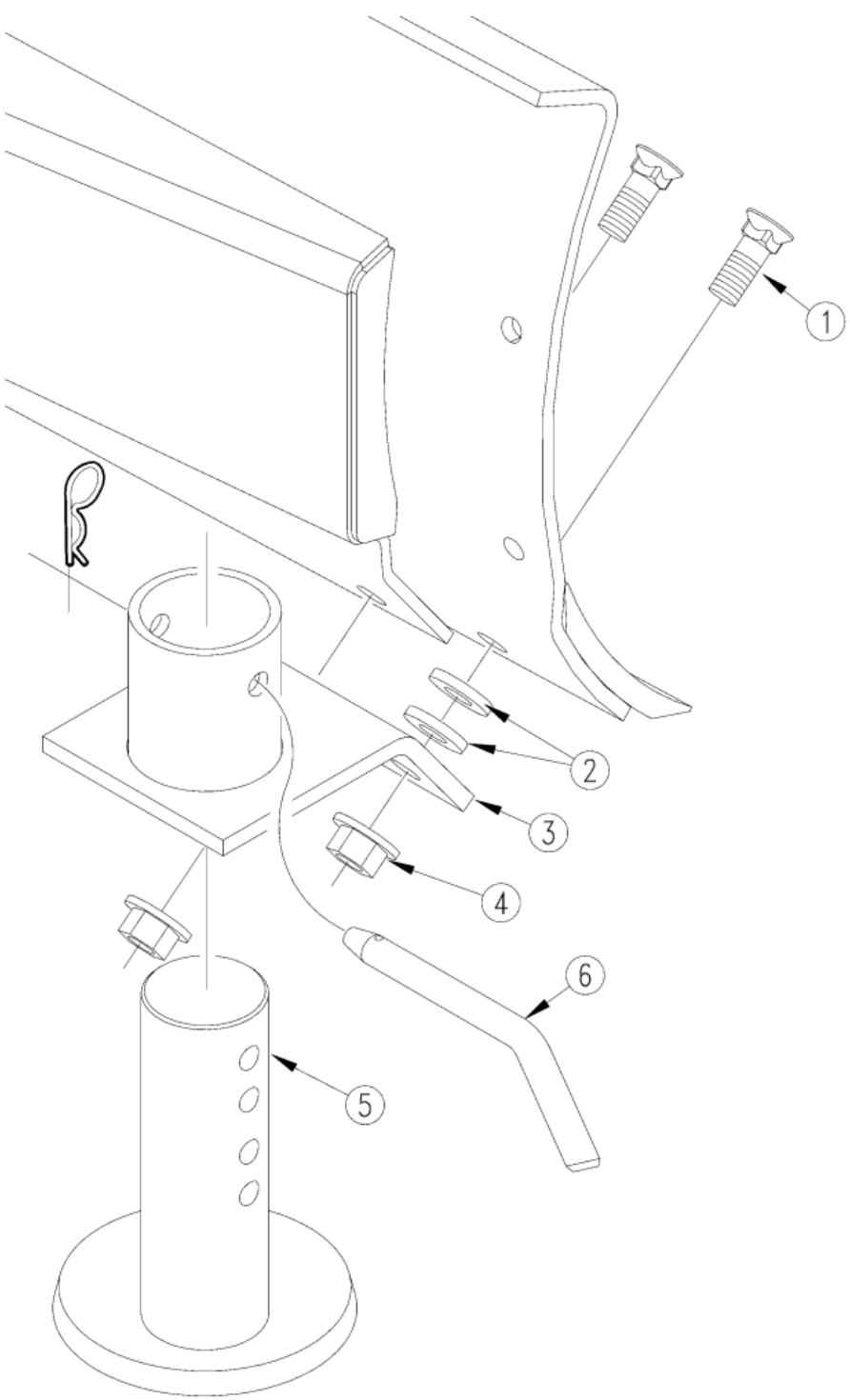

Skid Shoes RBT40 & RBT45 Series

Applies to Models: RBT45108, RBT4596, RBT40108, RBT4084, RBT4096

Ref.	Part No.	Part Description	Comments
	DWG17687	Drawing Image Number	
	301-333A	T35/40 SKID SHOES	S/N 633692+ (Doubles quantity of items 1-6)
	301-186A	RBT40/45 SKID SHOES	S/N 633691- (Doubles quantity of items 1-6)
		*	
1	802-211C	PLOW 5/8-11X2 1/2 GR5	
2	804-019C	WASHER FLAT 5/8 USS PLT	
3	301-334H	T35/40 SKID SHOE MNT WELDMENT	S/N 633692+
3	301-204H	40 SKID SHOE BRACKET WELDMENT	S/N 633691-
4	803-263C	NUT HEX FLANGE LOCK 5/8-11 PLT	
5	301-203H	SKID SHOE WELDMENT	
6	805-035C	PIN BENT .50X3.0 USBL W/PIN	

Skid Shoes RBT55 Series

Applies to Models: RBT55108, RBT55120, RBT5596

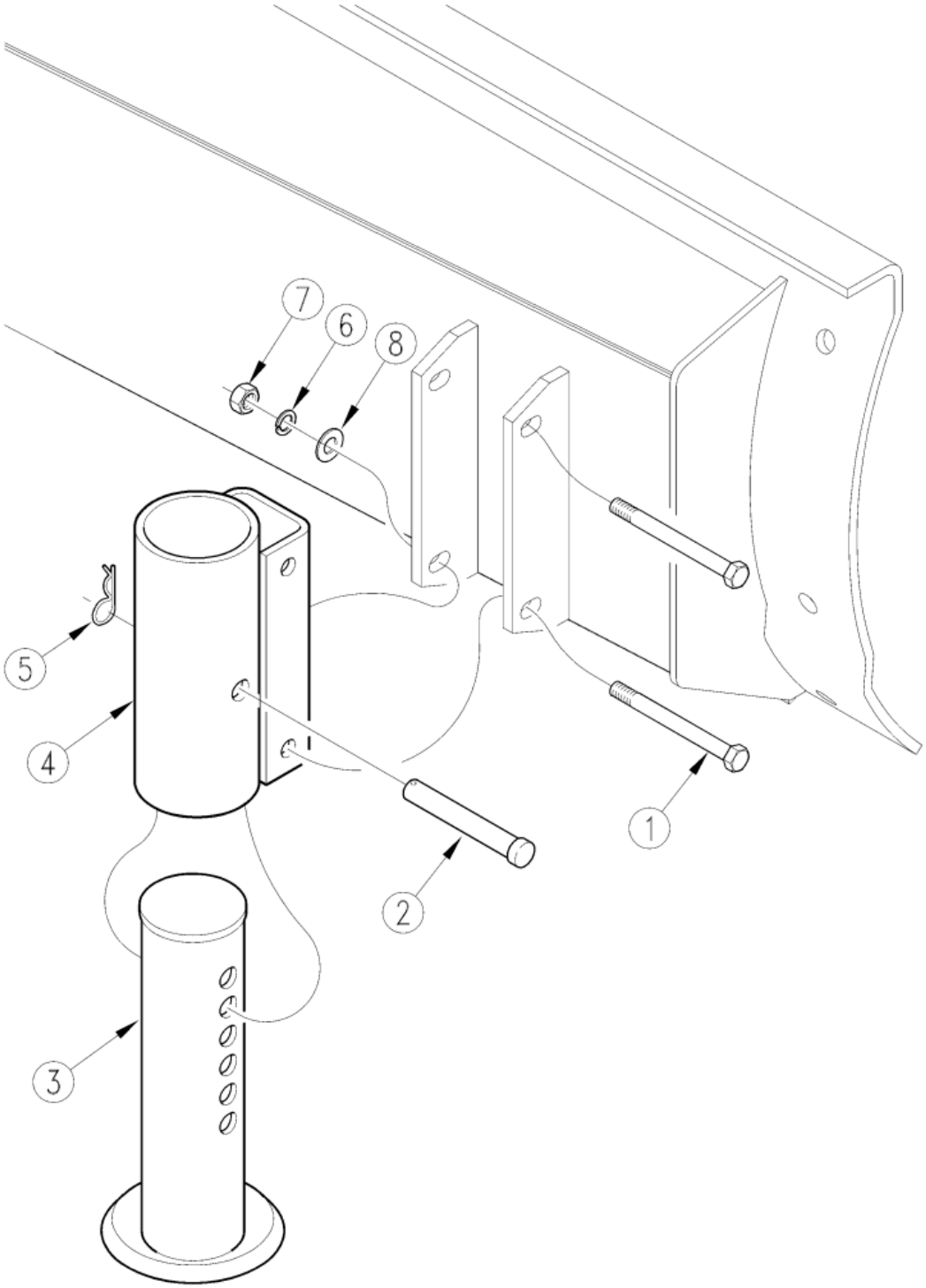

Skid Shoes RBT55 Series

Applies to Models: RBT55108, RBT55120, RBT5596

Ref.	Part No.	Part Description	Comments
	DWG12549	Drawing Image Number	
	301-110A	SKID SHOE ASS'Y	Doubles the qty of items 1-8
1	802-249C	HHCS 1/2-13X4 1/2 GR5 FTHD	
2	805-049C	PIN CLVS .63X3.94 USBL	
3	301-112H	SKID SHOE	
4	301-111H	SKID SHOE MOUNT	
5	805-032C	PIN HAIR COTTER .148 WIRE	
6	804-015C	WASHER LOCK SPRING 1/2 PLT	
7	803-020C	NUT HEX 1/2-13 PLT	
8	804-017C	WASHER FLAT 1/2 USS PLT	

Wear Plate RBT55 Series

Applies to Models: RBT55108, RBT55120, RBT5596

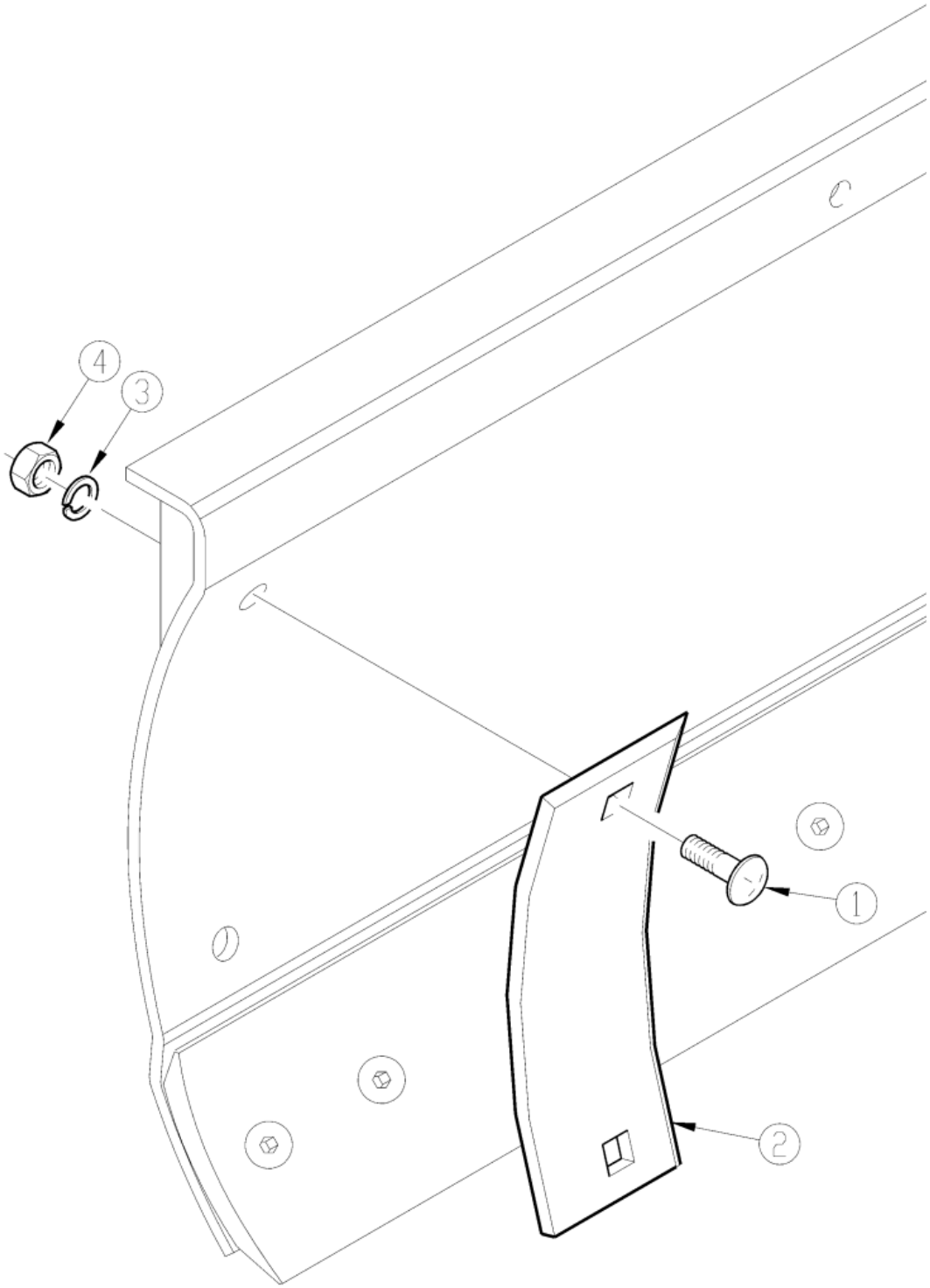

Wear Plate RBT55 Series

Applies to Models: RBT55108, RBT55120, RBT5596

Ref.	Part No.	Part Description	Comments
	DWG12909	Drawing Image Number	
	301-148A	HARDENED WEAR PLATES (PAIR)	Includes two of item 2 and four of items 1; 3 and 4
1	802-088C	RHSNB 5/8-11X2 GR5	
2	820-129C	HARDENED WEAR PLATE	
3	804-022C	WASHER LOCK SPRING 5/8 PLT	
4	803-021C	NUT HEX 5/8-11 PLT	

Part Number Index

Part Number	Page
130560	53
130781	49
136008	49
186562	49, 53
196-429D	57, 59
1A1141	25
1D0007-1050	31
1D0007-812	55
1D0007-850	37
1D0009-1812	27
1D0009-1850	25
1D0011-1812	41, 43
1D0205-2062	25
1D0206-1075	37
1D0206-1475	31
1D0210-2125	41
1D1003-5	31, 37
1D1013-5	41, 43, 55
1D1157-17	31, 37
1D1159-7	25
1D1161-26	41
1D1181-26	43
1D1205-8	37
1D1207-7	25
1D1209-8	41
1D1222-8	31
1D1401-300	31, 37
1D1401-350	25
1D1401-400	41
1D1551-16275	37, 55
1D1551-16300	37, 41, 43, 55
1D1582-16300	25, 27
1M6010	29, 33, 39
1M6010-ADI	29, 33, 39, 51
1M7016	35, 45
1M7016-ADI	35, 45
1M7021	47
1M7021-ADI	47
200-001D	77, 79
258818	53
269722	49
292003	53
2A0006	29, 33, 35, 39, 45, 47, 51
2A0012	29, 33, 35, 39, 45, 47, 51
2A0014	33, 39, 51
2A0016	29
2A0018	45
2A0019	35, 47
2A0024	29, 33, 35, 39, 45, 51
2A0025	47
2A0079-616	25, 27, 31, 37, 41, 43, 55
2A0132	29, 35, 39, 45, 47
2A0208	29, 35, 39, 45, 47
2A0209	35, 47
2A0235-6	25, 27, 31, 37, 41, 43, 55
2A0235-8	31, 37, 55
2A0236-10	41, 43
2A0236-9	25, 27
2A0246-12	31, 37, 55
2A0246-16	27, 41, 43
2A0580-1075	55
2A0580-1100	37
2A0580-1300	31
2A0581-2100	27
2A0581-2125	25
2A0582-2100	41
2A0582-2125	43
2M4410	39
2M4416	33, 51
2M5422	29
2M6676	45
2M7624	35
2S7682	47
300-087H	7
300-096H	7
300-139H	7
300-139H81	7
300-139H82	7
300-139H83	7
300-143H	7
300-143H81	7
300-143H82	7
300-143H83	7
300-144H	7
300-145H	5
300-146H	5, 21, 23, 103
300-147H	81, 83, 85, 87, 89, 91
300-150A	5
300-151A	61
300-152A	61
300-153L	61
300-154A	101
300-156H	101
300-160A	67
300-161A	67
300-171H	9, 17
300-172H	9, 17
300-172H81	9, 17
300-172H82	9, 17
300-172H83	9, 17
300-173H	9, 17
300-173H81	9, 17
300-173H82	9, 17
300-173H83	9, 17
300-174A	9
300-175A	9
300-177H	11, 17
300-181A	57
300-182A	21
300-183A	57, 59
300-184H	21
300-186A	63
300-187A	63, 65
300-189A	13
300-190A	13
300-191H	13, 19
300-191H81	13, 19
300-191H82	13, 19
300-191H83	13, 19
300-192H	13, 19
300-192H81	13, 19
300-192H82	13, 19
300-192H83	13, 19
300-197A	59
300-201H	13, 19
300-202S	13
300-205A	65
300-206A	23, 103
300-207H	23, 103
300-208H	13, 19
300-236D	7, 15, 19
300-296D	9
300-318D	7

Part Number	Page
300-361D	81, 83, 85, 87, 89, 91
300-429D	13
300-431D	13
301-010A	71
301-011H	71
301-110A	107
301-111H	107
301-112H	107
301-147A	73, 75
301-148A	109
301-153H	5
301-155H	5
301-156H	5
301-157H	5
301-158H	5
301-159H	73, 75
301-160H	83, 87, 91
301-162H	81, 83, 85, 87, 89, 91
301-163H	77, 79
301-164H	77, 79
301-166A	5
301-167A	5
301-168A	5
301-169K	77, 79, 81, 83, 85, 87
301-170S	85
301-171K	77, 79, 85, 87, 89, 91
301-175S	81, 83, 85, 87, 89, 91
301-186A	105
301-187A	93
301-188A	97
301-192H	9
301-193H	9
301-194H	9
301-195H	9
301-197H	9
301-203H	105
301-204H	105
301-208A	93
301-208D	73, 75
301-209A	13
301-209D	5, 13, 19
301-210A	13
301-211A	13
301-211D	81, 83, 85, 87, 89, 91
301-212H	13, 19
301-213H	13
301-214H	13
301-215H	9, 13
301-224H	81, 85, 89
301-225A	85
301-227A	99
301-228H	9
301-229H	9
301-230H	9
301-231H	9
301-232H	9, 17
301-232H81	9, 17
301-232H82	9, 17
301-232H83	9, 17
301-234A	95
301-235A	95
301-236A	85
301-240D	9, 17
301-250D	97
301-255D	99
301-281A	89
301-282A	81
301-283A	91
301-284A	83
301-324H	9, 17
301-325H	9
301-326H	9
301-327H	13
301-328H	13, 19
301-329H	5
301-333A	105
301-334H	105
301-658H	17, 19
301-659V	9, 13
305-067S	9
312-106D	79
314-070H	101
314-071H	101
314-107D	101
316-099D	7
316-100D	7
326-095S	19
3A5102	29
3A6106	45
3C4549	25, 27
3M4412	33, 39, 51
3M5410	29
3R1412	33, 39, 51
3R3410	29
3R6012	45
3R7612	35, 47
464307	49
491738	53
492278	53
492346	49
492585	49
492658	49
492675	53
492708	49
493211	53
493830	53
493914	49
494391	53
494797	49
4C2444	55
4C2566	31
4C2649	55
4C4360	55
4C4368	27
4C4385	43
4C5853	55
4C6903	43
4C7389	27
4C7390	27
4C7391	27
4M4104	33, 39, 51
4M4108	33, 39, 51
4M5102	29
4M5108	29
4M6108	45
4M7102	35
4M7108	35
4M7110	47
5M4110	39
5M4116	33, 51
5M5124	29
5M6124	45
5M7524	35, 47
648472	49
6M4162	39
6M4166	33, 51
6M5150	29
6R1162	39
6R1162-ADI	39
6R1164	33, 51

Part Number	Page
6R1164-ADI	33, 51
6R3150	29
6R3150-ADI	29
6R5162	45
6R5162-ADI	45
6R7162	35
6R7162-ADI	35
6R7182	47
7M4310	39
7M4316	33, 51
7M5324	29
7M6324	45
7M7324	35, 47
800-001C	17, 19, 77, 79
800-080C	5, 7, 9, 13, 17, 19, 81, 83, 85, 87, 89, 91
801-023C	49, 53
802-014C	101
802-017C	97
802-023C	29, 33, 35, 39, 45, 47, 51
802-024C	97, 99, 101
802-032C	101
802-034C	73, 75
802-082C	101
802-088C	73, 75, 109
802-091C	7, 13, 19, 71
802-128C	99
802-192C	7, 13, 19
802-206C	5, 9, 13, 17, 19
802-207C	5
802-211C	105
802-223C	93, 95
802-224C	7, 13
802-240C	9, 17, 77, 79
802-249C	107
802-283C	11, 17
802-288C	5, 9, 13
802-292C	5, 9, 13, 17, 19
802-326C	13, 19, 77, 79
802-397C	81, 83, 85, 87, 89, 91
803-014C	93, 95, 97, 99, 101
803-020C	13, 19, 53, 71, 73, 75, 99, 101, 107
803-021C	5, 9, 13, 73, 75, 109
803-022C	49
803-026C	7, 13, 19
803-029C	77, 79
803-234C	29, 33, 35, 39, 45, 47, 51
803-255C	7, 15
803-257C	35, 47
803-263C	5, 11, 15, 105
803-299C	81, 83, 85, 87, 89, 91
803-304C	5, 11, 15, 17, 19
804-006C	11, 17
804-007C	7, 11, 15, 17
804-013C	93, 95, 97, 99, 101
804-015C	7, 9, 13, 17, 19, 73, 75, 77, 79, 99, 101, 107
804-016C	9, 13, 17, 19, 77, 79, 99, 101
804-017C	107
804-019C	105
804-021C	5, 11, 17
804-022C	5, 9, 13, 73, 75, 109
804-023C	5, 9, 13, 17, 19
804-055C	77, 79
804-065C	71
805-004C	61, 85
805-007C	5, 21, 23, 103
805-015C	9, 13
805-016C	77, 79
805-021C	9, 17
805-032C	25, 27, 37, 41, 43, 55, 107
805-035C	105
805-040C	81, 83, 85, 87, 89, 91
805-049C	107
805-065C	9, 17
805-081C	7, 13, 19
805-088C	5, 13, 19, 21, 23, 57, 59, 81, 83, 89, 91, 103
805-090C	5, 21, 23, 57, 59, 81, 83, 89, 91, 103
805-103C	7, 11, 15, 17, 19
805-124C	29, 35, 39, 45, 47, 61
805-146C	81, 83, 87, 89, 91
805-161C	17
805-164C	81, 83, 85, 87, 89, 91
805-167C	81, 83, 85, 87, 89, 91
805-177C	11
805-216C	81, 83, 87, 89, 91
805-433C	11, 17
810-009C	31, 37
810-015C	33, 39, 51
810-023C	97, 99, 101
810-126C	25, 27, 29, 57
810-146C	25
810-149C	29
810-195C	31, 33, 61, 85
810-199C	33
810-213C	35, 61
810-236C	35, 47
810-315C	31
810-384C	37, 39, 57, 59
810-385C	93
810-391C	93

Part Number	Page
810-413C	41, 43, 45, 59
810-417C	95
810-418C	95
810-425C	41
810-514C	47, 49, 61
810-624C	51, 53
810-887C	53
811-038C	97, 99, 101
811-041C	97, 99
811-063C	57, 59, 61, 85
811-088C	57, 59, 61, 101
811-125C	57, 59
811-126C	61
811-127C	57
811-150C	97, 99
811-192C	93, 95
811-216C	57
811-245C	57, 59, 101
811-247C	61, 85
811-386C	97, 99
811-394C	57, 59, 61
811-685C	93, 95
811-897C	59, 61
811-907C	61
811-953C	57, 59
811-985C	59
811-988C	57
814-059C	77, 79
815-091C	77, 79
816-098C	77, 79
816-504C	7, 11, 15, 17
818-112C	67
818-138C	67
818-162C	67
818-163C	67
818-197C	67
818-199C	67
818-200C	67
818-201C	67
818-229C	63, 65, 67
818-230C	63, 65, 67
818-298C	63, 65, 67
818-335C	65, 67, 81, 83, 87, 89, 91
818-339C	63, 65, 67
818-487C	63, 65, 67
818-491C	63, 65, 67
818-681C	65, 67
818-727C	67
818-891C	63, 65
818-893C	67
818-895C	67
818-902C	63, 65, 67
818-982C	63
818-983C	63
818-984C	63
818-989C	67
818-990C	67
818-991C	67
820-035C	5, 9, 13
820-046C	9, 17
820-072C	5, 9, 13, 19
820-073C	5
820-129C	109
821-011C	69
821-011CGL	69
821-011CQT	69
821-011CTU	69
821-054C	69
821-054CGL	69
821-054CQT	69
821-054CTU	69
821-058C	69
821-058CGL	69
821-058CQT	69
821-058CTU	69
821-066C	69
821-066CGL	69
821-066CQT	69
821-066CTU	69
821-067C	69
821-067CGL	69
821-067CQT	69
821-067CTU	69
821-070C	69
821-070CGL	69
821-070CQT	69
821-070CTU	69
821-080C	69
821-080CGL	69
821-080CQT	69
821-080CTU	69
822-091C	77, 79
822-092C	77, 79
827-071C	11, 17
827-108C	7, 15
838-075C	63, 65, 67
838-151C	65
838-152C	65
838-517C	63
838-614C	63, 65, 67
838-615C	63, 65, 67
838-962C	63, 65
838-964C	67
838-965C	63, 65, 67
838-966C	63, 65, 67
841-006C	57, 59
848-450C	67
850-353C	43
850-356C	27
850-357C	55
850-449C	55, 57, 59
890-005C	5, 7, 13, 19
890-051C	7, 81, 83, 85, 87, 89, 91
890-126C	13, 19
890-143C	9, 17
890-177C	5, 81, 83, 89, 91, 103
890-637C	21, 23
890-850C	7, 15, 19
C7918B-1	43
DWG 11717	39
DWG 12493	7
DWG 12495	87
DWG 12499	51
DWG 12500	47
DWG 12501	5
DWG 12525	61
DWG 17581	67
DWG 17682	57
DWG 17685	9
DWG 18898	13
DWG 18899	23, 103
DWG 18900	59

Part Number	Page
DWG 18901	65
DWG 18903	95
DWG 18904	85
DWG 18934	45
DWG 25656	89
DWG 25657	81
DWG 25658	91
DWG 25659	83
DWG 25896	53
DWG 25903	49
DWG 72017	17
DWG 72019	19
DWG 72932	43
DWG 72933	27
DWG 72940	37
DWG 74608	55
DWG 74766	41
DWG 74772	25
DWG 78259	29
DWG 78277	31
DWG 78278	33
DWG 78281	35
DWG12549	107
DWG12550	73, 75
DWG12908	77, 79
DWG12909	109
DWG15168	101
DWG17683	21
DWG17686	63
DWG17687	105
DWG17688	71
DWG17730	93
DWG18902	99
DWG25655	97
N/A	27, 29, 31, 33, 35, 37, 39, 45, 47, 49, 51, 53, 55

This Page Intentionally Left Blank

Great Plains Manufacturing, Inc.
Corporate Office: P.O. Box 5060
Salina, Kansas 67402-5060 USA

www.landpride.com