Table of Contents

Rear Blades

RB2572, RB2584, RB2596, RB3572, RB3584 & RB3596

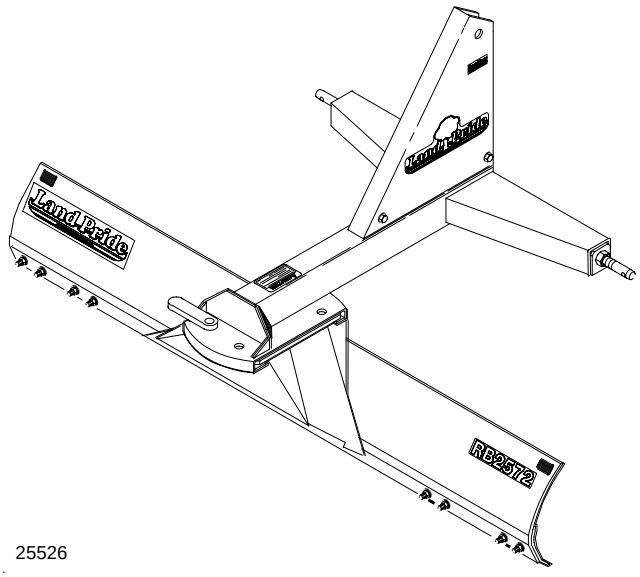

25526

RB25 Series

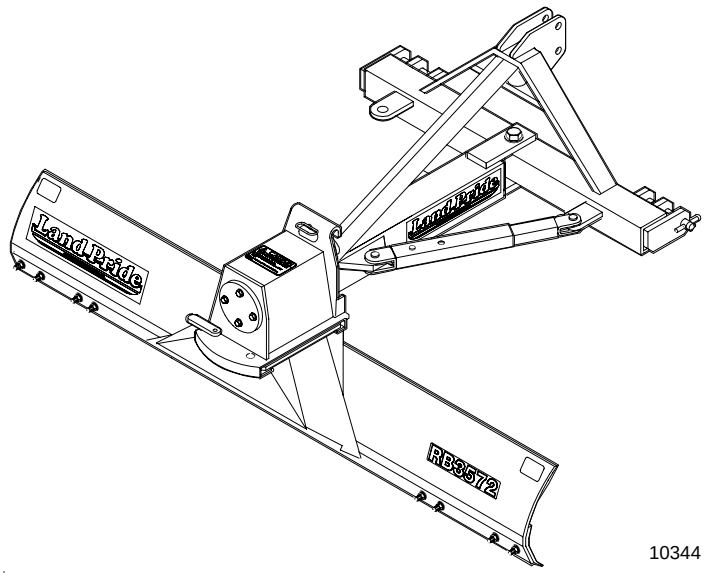

10344

RB35 Series

301-131M
Operator's Manual

Read the Operator's Manual entirely. When you see this symbol, the subsequent instructions and warnings are serious - follow without exception. Your life and the lives of others depend on it!

Cover photo may show optional equipment not supplied with standard unit.

 Printed **7/25/12**

Printed in the United States of America.

These are common practices that may or may not be applicable to the products described in this manual.

Safety at All Times

Thoroughly read and understand the instructions given in this manual before operation. Refer to the "Safety Label" section, read all instructions noted on them.

Do not allow anyone to operate this equipment who has not fully read and comprehended this manual and who has not been properly trained in the safe operation of the equipment.

- ▲ Operator should be familiar with all functions of the unit.
- ▲ Operate implement from the driver's seat only.
- ▲ Make sure all guards and shields are in place and secured before operating implement.
- ▲ Do not leave tractor or implement unattended with engine running.
- ▲ Dismounting from a moving tractor could cause serious injury or death.
- ▲ Do not allow anyone to stand between tractor and implement while backing up to implement.
- ▲ Keep hands, feet, and clothing away from power-driven parts.
- ▲ Wear snug fitting clothing to avoid entanglement with moving parts.
- ▲ Watch out for wires, trees, etc., when raising implement. Make sure all persons are clear of working area.
- ▲ Turning tractor too tight may cause implement to ride up on wheels. This could result in injury or equipment damage.
- ▲ Do not carry passengers on implement at any time.

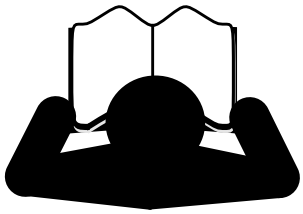

Look For The Safety Alert Symbol

The SAFETY ALERT SYMBOL indicates there is a potential hazard to personal safety involved and extra safety precaution must be taken. When you see this symbol, be alert and carefully read the message that follows it. In addition to design and configuration of equipment, hazard control, and accident prevention are dependent upon the awareness, concern, prudence, and proper training of personnel involved in the operation, transport, maintenance, and storage of equipment.

Be Aware of Signal Words

A Signal word designates a degree or level of hazard seriousness. The signal words are:

⚠ DANGER
Indicates an imminently hazardous situation which, if not avoided, will result in death or serious injury. This signal word is limited to the most extreme situations, typically for machine components that, for functional purposes, cannot be guarded.

⚠ WARNING
Indicates a potentially hazardous situation which, if not avoided, could result in death or serious injury, and includes hazards that are exposed when guards are removed. It may also be used to alert against unsafe practices.

⚠ CAUTION
Indicates a potentially hazardous situation which, if not avoided, may result in minor or moderate injury. It may also be used to alert against unsafe practices.

For Your Protection

- ▲ Thoroughly read and understand the "Safety Label" section, read all instructions noted on them.

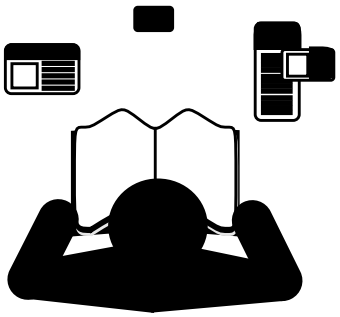

Shutdown and Storage

- ▲ Lower machine to ground, put tractor in park, turn off engine, and remove the key.
- ▲ Detach and store implements in a area where children normally do not play. Secure implement by using blocks and supports.

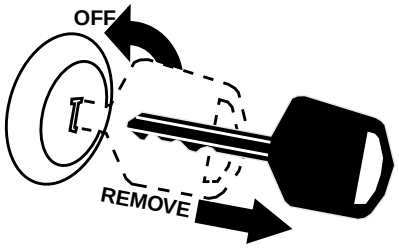

Parts Manual QR Locator

The QR (Quick Reference) code on the front cover and to the left will take you to the Parts Manual for this equipment. Download the appropriate App on your smart phone, open the App, point your phone on the QR code and take a picture.

Dealer QR Locator

The QR code on the left will link you to available dealers for Land Pride products. Refer to Parts Manual QR Locator on this page for detailed instructions.

These are common practices that may or may not be applicable to the products described in this manual.

Use Safety Lights and Devices

- ▲ Slow moving tractors, self-propelled equipment, and towed implements can create a hazard when driven on public roads. They are difficult to see, especially at night.
- ▲ Flashing warning lights and turn signals are recommended whenever driving on public roads.

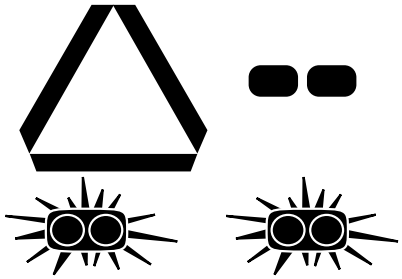

Transport Machinery Safely

- ▲ Comply with state and local laws.
- ▲ Maximum transport speed for implement is 20 mph. DO NOT EXCEED. Never travel at a speed which does not allow adequate control of steering and stopping. Some rough terrain require a slower speed.
- ▲ Sudden braking can cause a towed load to swerve and upset. Reduce speed if towed load is not equipped with brakes.
- ▲ Use the following maximum speed - tow load weight ratios as a guideline:

  20 mph when weight is less than or equal to the weight of tractor.

  10 mph when weight is double the weight of tractor.
- ▲ **IMPORTANT:** Do not tow a load that is more than double the weight of tractor.

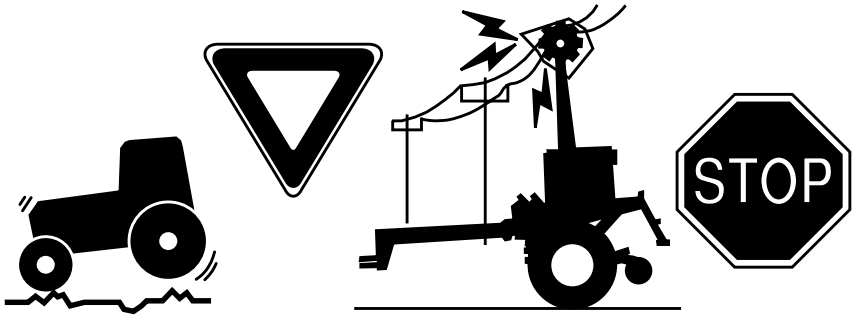

Use A Safety Chain

- ▲ A safety chain will help control drawn machinery should it separate from the tractor drawbar.
- ▲ Use a chain with the strength rating equal to or greater than the gross weight of the towed machinery.
- ▲ Attach the chain to the tractor drawbar support or other specified anchor location. Allow only enough slack in the chain to permit turning.
- ▲ Do not use safety chain for towing.

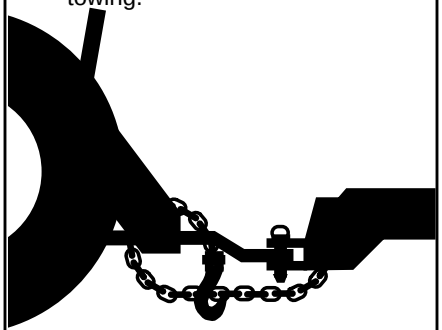

Practice Safe Maintenance

- ▲ Understand procedure before doing work. Use proper tools and equipment, refer to Operator's Manual for additional information.
- ▲ Work in a clean dry area.
- ▲ Lower the implement to the ground, put tractor in park, turn off engine, and remove key before performing maintenance.
- ▲ Allow implement to cool completely.
- ▲ Do not grease or oil implement while it is in operation.
- ▲ Inspect all parts. Make sure parts are in good condition & installed properly.
- ▲ Remove buildup of grease, oil, or debris.
- ▲ Remove all tools and unused parts from implement before operation.

These are common practices that may or may not be applicable to the products described in this manual.

Prepare for Emergencies

- ▲ Be prepared if a fire starts.
- ▲ Keep a first aid kit and fire extinguisher handy.
- ▲ Keep emergency numbers for doctor, ambulance, hospital, and fire department near phone.

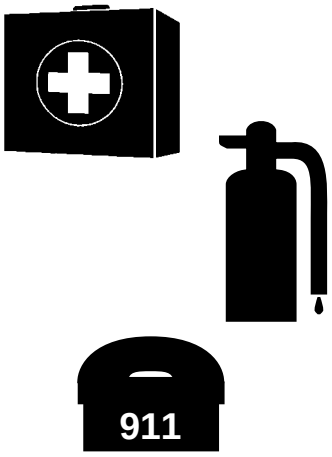

Wear Protective Equipment

- ▲ Wear protective clothing and equipment appropriate for the job. Avoid loose fitting clothing.
- ▲ Prolonged exposure to loud noise can cause hearing impairment or hearing loss. Wear suitable hearing protection such as earmuffs or earplugs.
- ▲ Operating equipment safely requires the full attention of the operator. Avoid wearing radio headphones while operating machinery.

Keep Riders Off Machinery

- ▲ Riders obstruct the operator's view they could be struck by foreign objects or thrown from the machine.
- ▲ Never allow children to operate equipment.

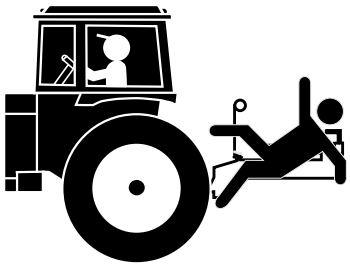

Avoid High Pressure Fluids Hazard

- ▲ Escaping fluid under pressure can penetrate the skin causing serious injury.
- ▲ Avoid the hazard by relieving pressure before disconnecting hydraulic lines or performing work on the system.
- ▲ Make sure all hydraulic fluid connections are tight and all hydraulic hoses and lines are in good condition before applying pressure to the system.
- ▲ Use a piece of paper or cardboard, NOT BODY PARTS, to check for suspected leaks.
- ▲ Wear protective gloves and safety glasses or goggles when working with hydraulic systems.
- ▲ If an accident occurs, see a doctor immediately. Any fluid injected into the skin must be treated within a few hours or gangrene may result.

Safety Labels

Your Rear Blade comes equipped with all safety labels in place. They were designed to help you safely operate your implement. Read and follow their directions.

1. *Keep all safety labels clean and legible.*
2. *Replace all damaged or missing labels. Order new labels from your nearest Land Pride dealer. To find your nearest dealer, visit our dealer locator at www.landpride.com.*
3. *Some new equipment installed during repair requires safety labels to be affixed to the replaced component as specified by Land Pride. When ordering new components make sure the correct safety labels are included in the request.*
4. *Refer to this section for proper label placement. To install new labels:*
   a. *Clean the area the label is to be placed.*
   b. *Spray soapy water on the surface where the label is to be placed.*
   c. *Peel backing from label. Press firmly onto the surface.*
   d. *Squeeze out air bubbles with the edge of a credit card or with a similar type straight edge.*

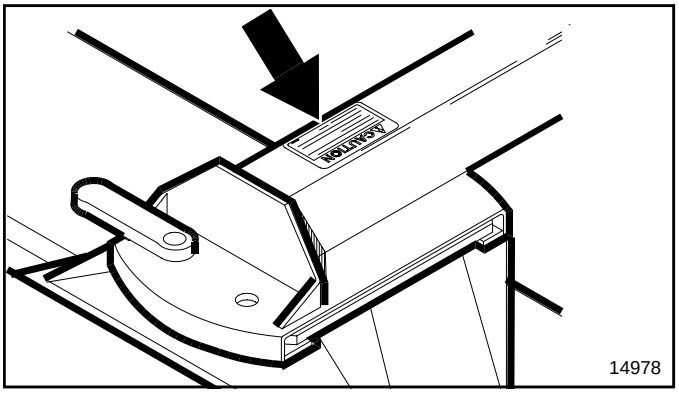

Model RB25

818-202C

Caution: Retaining Nut

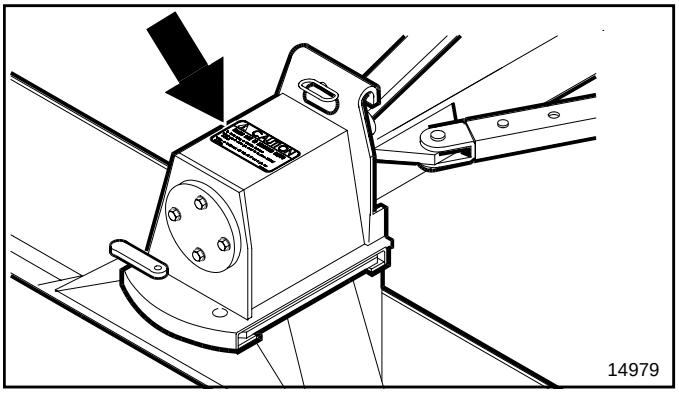

Model RB35

818-202C

Caution: Retaining Nut

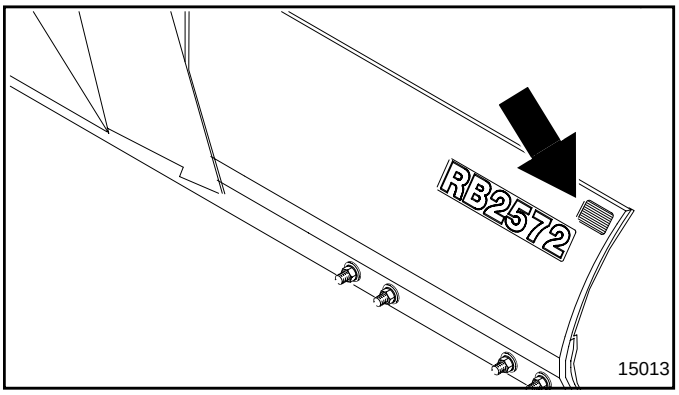

818-230C

Red reflector (Both ends)

Land Pride welcomes you to the growing family of new product owners. This Rear Blade has been designed with care and built by skilled workers using quality materials. Proper assembly, maintenance, and safe operating practices will help you get years of satisfactory use from the machine.

Application

The Land Pride RB25 & RB35 Series Rear Blades are built tough from the ground up for applications ranging from landscaping, construction, snow removal, feedlot cleaning, and all-around farm use. They come in 72", 84", and 96" working widths, feature 9 forward and 5 reverse working angles up to 60° and are adapted for the Land pride Quick Hitch. A retractable parking stand is included to accommodate easier blade removal, storage, and remount capabilities.

The Land Pride RB25 Series Rear Blades are designed for Category I 3-Point hitch mounting and attachment to tractors in the 25 to 60 hp range.

The Land Pride RB35 Series Rear Blades are designed for Category I & II 3-Point hitch mounting and attachment to tractors in the 35 to 80 hp range. The ends can be tilted up or down by as much as 30° in 15° increments and the whole blade can be offset to the left or right by as much as 22".

Available accessories for both Series includes a single gauge wheel for good depth control, end plates for holding material, and skid shoes for blade protection. The moldboard can be removed on either Series to accommodate installation of a landscape rake. A hydraulic cylinder can be added to both Series to convert the single gauge wheel to hydraulics, A second hydraulic cylinder can be added to the RB35 Series to convert blade offset to hydraulics.

See **“Specifications & Capacities”** on page 23 and **“Features and Benefits”** on page 24 for additional information and performance enhancing options.

Using This Manual

- This Operator’s Manual is designed to help familiarize you with safety, assembly, operation, adjustments, troubleshooting, and maintenance. Read this manual and follow the recommendations to help ensure safe and efficient operation.
- The information contained within this manual was current at the time of printing. Some parts may change slightly to assure you of the best performance.
- To order a new Operator’s or Parts Manual contact your authorized dealer. Manuals can also be downloaded, free-of-charge from our website at www.landpride.com.

Terminology

“Right” or “Left” as used in this manual is determined by facing forward in the direction the machine will operate while in use unless otherwise stated.

Definitions

IMPORTANT: A special point of information related to the following topic. Land Pride’s intention is this information must be read & noted before continuing.

NOTE: A special point of information that the operator should be aware of before continuing.

Owner Assistance

The Online Warranty Registration or Warranty Registration card should be completed by the dealer at the time of purchase. This information is necessary to provide you with quality customer service.

The parts on your Rear Blade have been specially designed by Land Pride and should only be replaced with genuine Land Pride parts. Contact a Land Pride dealer if customer service or repair parts are required. Your Land Pride dealer has trained personnel, repair parts, and equipment needed to service the implement.

Serial Number

Model No. _____Serial No. _____

For quick reference and prompt service, record model number and serial number in the spaces provided above and again on warranty page 27. Always provide model number and serial number when ordering parts and in all correspondences with your Land Pride dealer. Refer to Figure 1 for location of your serial number plate.

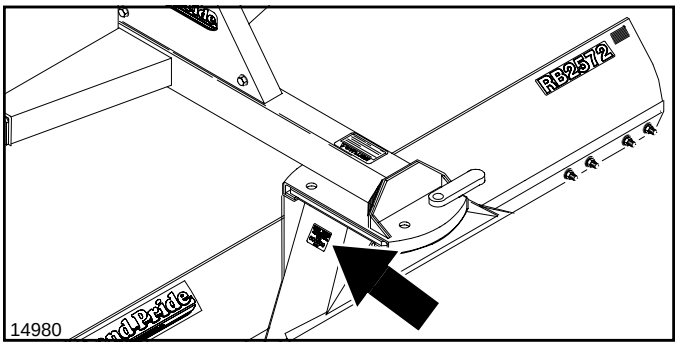

RB25 Serial Number Plate Location
Figure 1

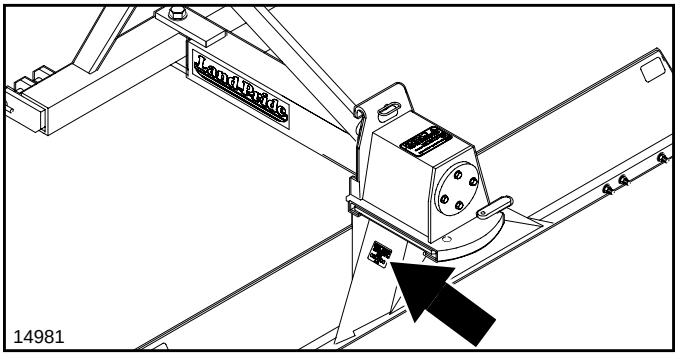

RB35 Serial Number Plate Location
Figure 2

Further Assistance

Your dealer wants you to be satisfied with your new Rear Blade. If for any reason you do not understand any part of this manual or are not satisfied with the service received, the following actions are suggested:

1. Discuss the matter with your dealership service manager making sure he is aware of any problems you may have and that he has had the opportunity to assist you.
2. If you are still not satisfied, seek out the owner or general manager of the dealership, explain the problem and request assistance.
3. For further assistance write to:

Land Pride Service Department
1525 East North Street
P.O. Box 5060
Salina, Ks. 67402-5060

E-mail address
lpservicedept@landpride.com

Tractor Requirements

Tractor horse power and hitch category should be within the range noted below. Tractors outside the horsepower range must not be used.

Tractor Horse Power Rating, RB25 Series . . . 25-60 HP
Tractor Horse Power Rating, RB35 series . . . 35-80 HP

Hitch Category, RB25 Series . . . . . Cat. 1
Hitch Category, RB35 Series. . . . . Cat. 1 & 2

Torque Requirements

See **"Torque Values Chart for Common Bolt Sizes"** on page 26 to determine correct torque values when tightening hardware.

RB25 Rear Blade

Refer to Figure 1-1:

DANGER

Rear Blade components are very heavy and can injure a person should they suddenly fall from a lifting device or improvised supports. Always make certain components are properly secured before lifting and properly supported on the ground before removing lifting device. Always keep feet and other extremities clear of areas where components can fall.

1. Remove Rear Blade components from shipping crate.
2. Position main frame (#1) in an upright stable position at blade height on suitable supports or attach to a tractor's lower 3-point arms.
3. Assemble moldboard (#2) to main frame (#1) by rotating moldboard such that turntable (#13) is 90 degrees to the main frame turntable (#12) and then insert pin (#14) into turntable (#13).
4. Attach turntable (#13) to pin (#14) with 1" flat washer (#3) and slotted hex nut (#4). Tighten nut securely and then back nut off 1/2 to 3/4 of a turn. Secure nut with 3/16" x 1 3/4" cotter pin (5).
5. Turn moldboard (#2) to a forward position and insert drop pin (#6). Secure pin with hair pin cotter (#7).
6. Assemble upper hitch (#8) to main frame (#1) with 5/8"-11 x 3 1/2" GR5 hex head cap screws (#9), lock washers (#10), and hex nuts (#11). Tighten nuts to the proper torque.

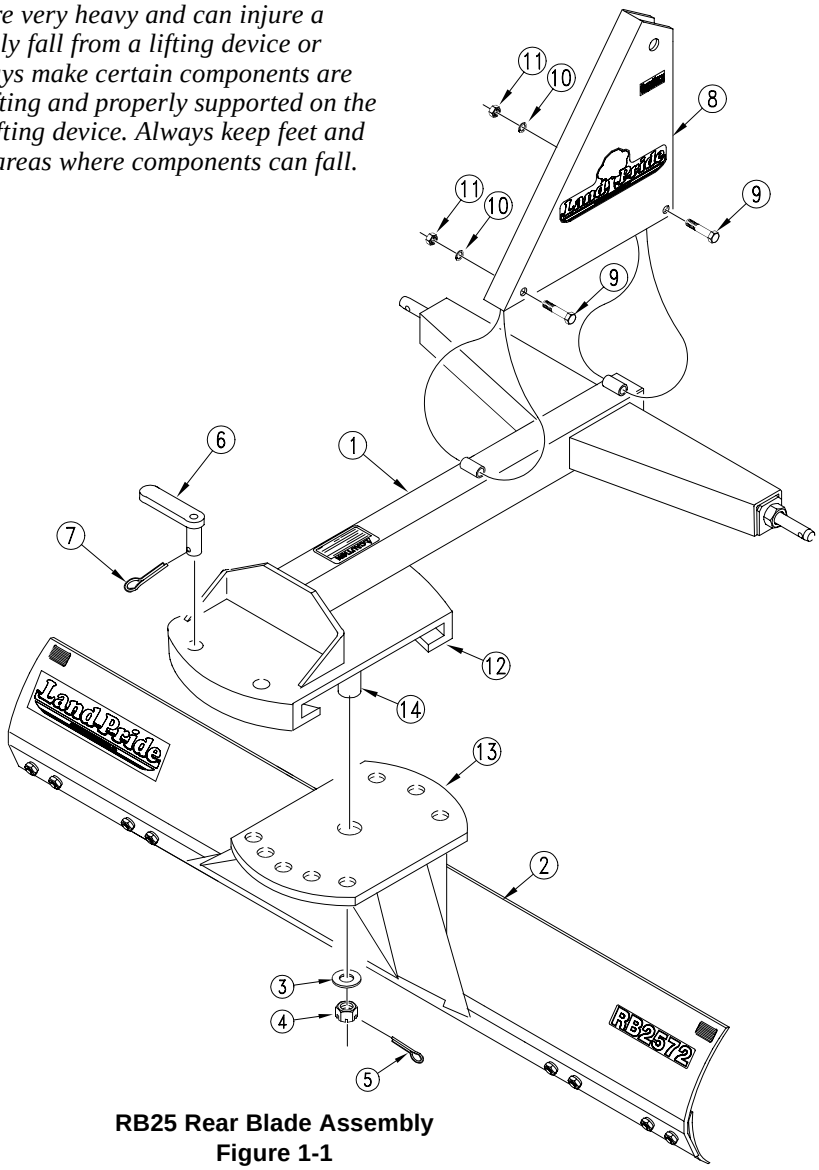

RB25 Rear Blade Assembly
Figure 1-1

14967

RB35 Rear Blade

Refer to Figure 1-2:

DANGER

Rear Blade components are very heavy and can injure a person should they suddenly fall from a lifting device or improvised supports. Always make certain components are properly secured before lifting and properly supported on the ground before removing lifting device. Always keep feet and other extremities clear of areas where components can fall.

1. Uncrate Blade Assembly from shipping crate.
2. Position hitch frame (#1) in an upright stable position at blade height on suitable supports or attach frame to the tractor's 3-point hitch.
3. Attach main frame (#2) to hitch frame (#1) with 1" -8 x 6 1/2" hex head cap screw (#5) and lock nut (#6). Draw nut up snug and then back nut off 1/4 of a turn.
4. Insert pivot pin (#3) as shown, and secure with 3/16" x 1 3/4" long cotter pin (#4).
5. Assemble moldboard (#7) to main frame (#2) by rotating moldboard such that turntable (#19) is 90 degrees to main frame turntable (#18) and then insert pin (#20) into turntable (#19).
6. Attach turntable (#19) to pin (#20) with 1" flat washer (#8) and slotted hex nut (#9). Tighten nut securely and then back nut off 1/2 to 3/4 of a turn. Secure nut with 3/16" x 1 3/4" cotter pin (#10).
7. Turn moldboard (#7) to a forward position and insert drop pin (#11). Secure pin with hair pin cotter (#12).

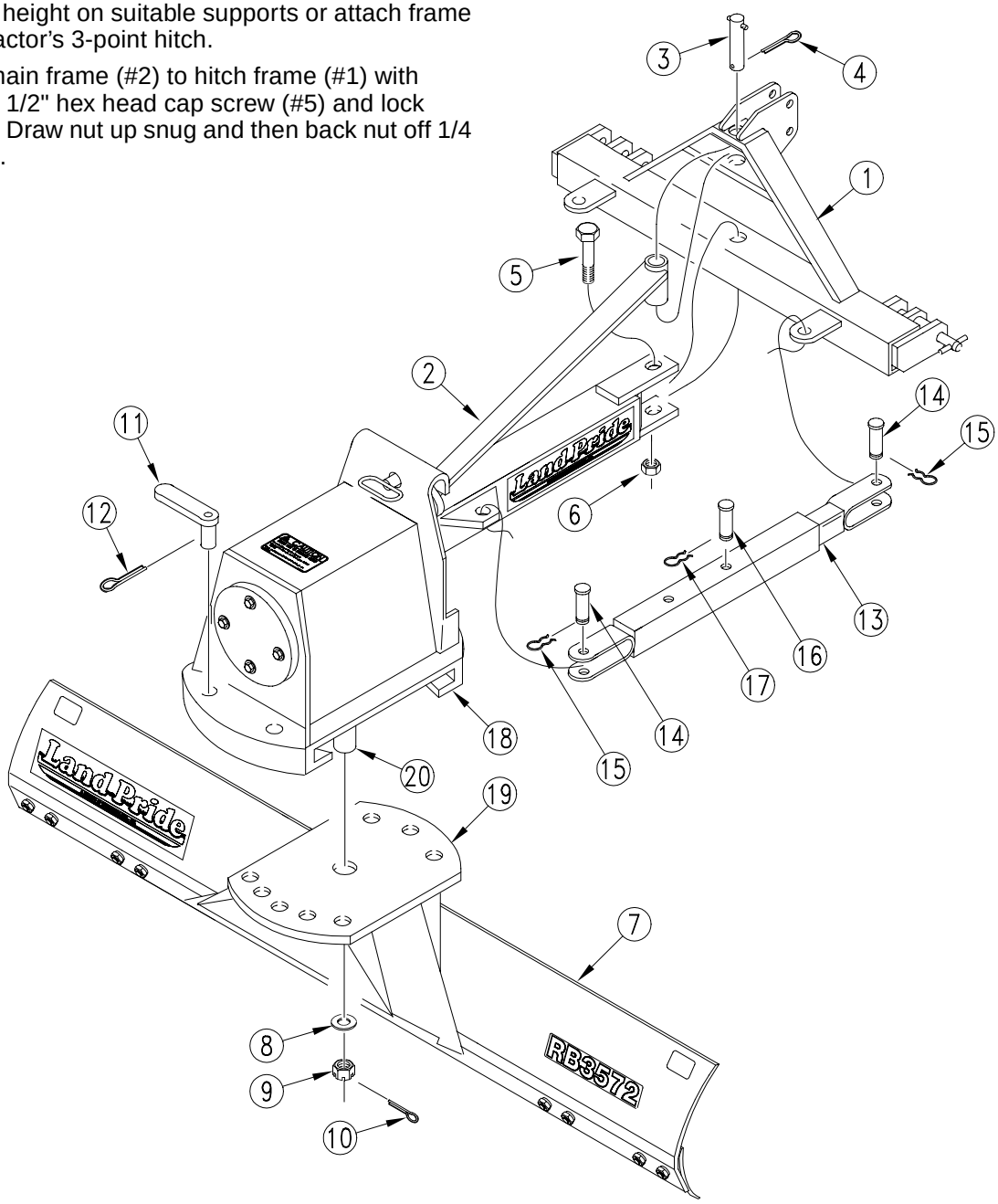

RB35 Rear Blade Assembly
Figure 1-2

14968

3-Point Hook-Up

DANGER

A Crushing Hazard exists when hooking-up equipment to a tractor. Do not allow anyone to stand between tractor and implement while backing-up to implement. Do not operate hydraulic 3-point lift controls while someone is directly behind the tractor or near the implement.

DANGER

Always set tractor transmission in park, engage park brake, shut tractor engine off and remove switch key before allowing anyone including operator to hook-up and unhook Rear Blade from tractor.

Lower Hitch Hook-Up For RB25 Series

Refer to Figure 1-3 & Figure 1-4:

1. Ensure lower arms are stabilized to prevent excessive side movement.
2. Slowly back tractor up to the Rear Blade while using 3-point hydraulic control to align hitch holes in lower arms with hitch pins on implement.
3. Engage tractor park brake, shut engine off, and remove key before dismounting from tractor.
4. With lower arms properly aligned, slide arm hitch holes onto implement hitch pins. Secure arms in place with linch pins.
5. Raise support stand up to transport position and secure with retaining pin.

Lower Hitch Hook-Up For RB35 Series

Refer to Figure 1-3 & Figure 1-5:

1. Ensure lower arms are stabilized to prevent excessive side movement.
2. Slowly back tractor up to the Rear Blade while using the 3-point hydraulic control to align hitch holes in the lower arms with clevis pin holes on the implement.
3. Engage tractor park brake, shut engine off, and remove key before dismounting from tractor.
4. With lower lift arms aligned and positioned in the clevises, insert hitch pins through the clevis lugs and lower arm hitch holes. Be sure to use supplied bushings when attaching to a category 2 hitch. Secure hitch pins with linch pins.
5. Raise support stand all the way up to transport position and secure in place with retaining pin.

Top Center Hitch Hook-Up

IMPORTANT: The top center 3-Point link can be removed from blade and tractor before using gauge wheel accessory.

Refer to Figure 1-3:

1. Connect tractor's top center link to the upper hitch mounting hole using customer supplied 3/4" clevis pin, 1" bushing if Cat. II hitch, and linch pin.

Hitch Adjustments

1. Return to the tractor and slowly operate controls up and down to check for clearance. Make certain Rear Blade does not interfere with tractor hitch, tires, and drawbar. Move or remove the drawbar if it interferes.

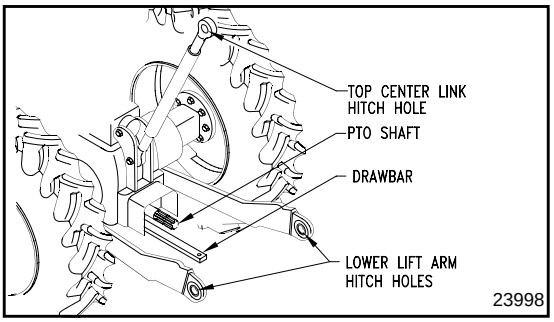

Tractor 3-Point Hitch
Figure 1-3

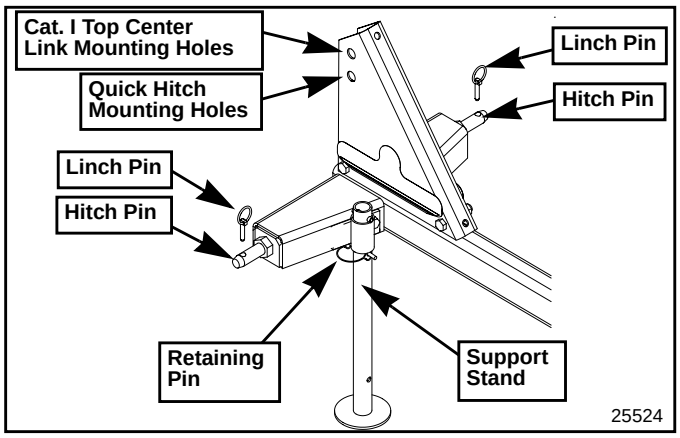

RB25 Series 3-Point Hitch
Figure 1-4

2. Manually adjust one of the two lower lift arms up or down to level the blade from left to right.
3. Manually adjust length of the top center link to level the blade from front to rear.

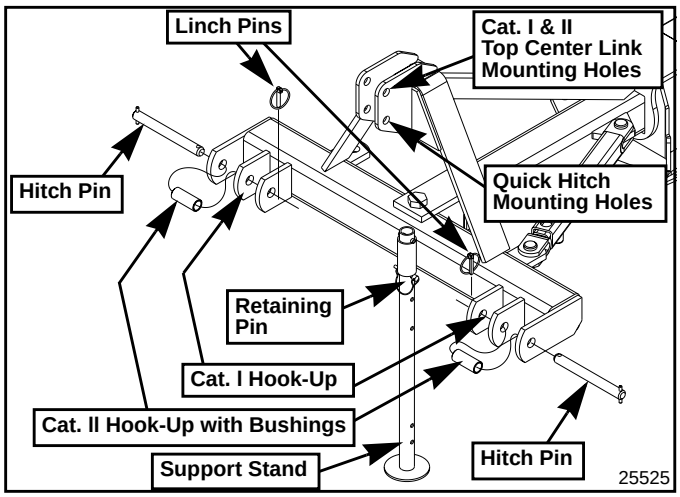

RB35 Series 3-Point Hitch
Figure 1-5

RB25 Single Gauge Wheel

Kit Bundles

300-014A. . . . . 25 & 35 BLADE & RAKE SINGLE GW

300-081A. . . . . HYDRAULIC BUNDLE W/ HOSES

Refer to Figure 2-1:

1. Use gauge wheel mounting bracket (#1) as a pattern to locate and drill three 11/16" dia. holes in the blade frame back plate.
2. Attach mounting bracket (#1) with three 5/8"-11 x 1 1/2" GR5 hex head cap screws (#2), lock washers (#3), and hex nuts (#4). Tighten nuts to correct torque.
3. Attach gauge wheel arm (#5) to mounting bracket (#1) with 5/8"-11 x 5" GR5 hex head cap screw (#6), flat washer (#7), 3 5/16" long tube (#8), flat washer (#9), and hex lock nut (#10). Tighten lock nut to correct torque.
4. Install 1 7/8" machine washer (#15) onto gauge wheel spindle (#14).
5. Insert gauge wheel spindle (#15) into gauge wheel arm (#5).
6. Secure gauge wheel with machine washer (#16) and 1/4" cotter pin (#17). Bend one or both legs of cotter pin to prevent cotter pin from falling out.

Ratchet Jack Installation (standard)

1. Attach ratchet jack (#11) to mounting bracket (#1) and gauge wheel arm (#5) with clevis pins (#12). Secure pins with hair pin cotters (#13).

Hydraulic Cylinder Installation (Optional)

1. Position hydraulic cylinder (#18) with ports on top as shown. Thread 90 degree elbows (#19) into the two ports and tighten.
2. Screw 125" long hydraulic hoses (#20) to the elbows and tighten.
3. Thread hydraulic couplings (couplings provided by customer) to the other end of hydraulic hoses and tighten.

IMPORTANT: Attach cylinder base to the front mounting lug. The base will interfere with the gauge wheel arm if attached to the rear mounting lug.

4. Attach hydraulic cylinder to the lugs on the gauge wheel with two 1" clevis pins (#21). Make sure hydraulic ports are positioned on top and cylinder base is located to the front as shown.
5. Secure clevis pins with pin clips (#22).
6. Connect hoses to the tractor's hydraulic system.

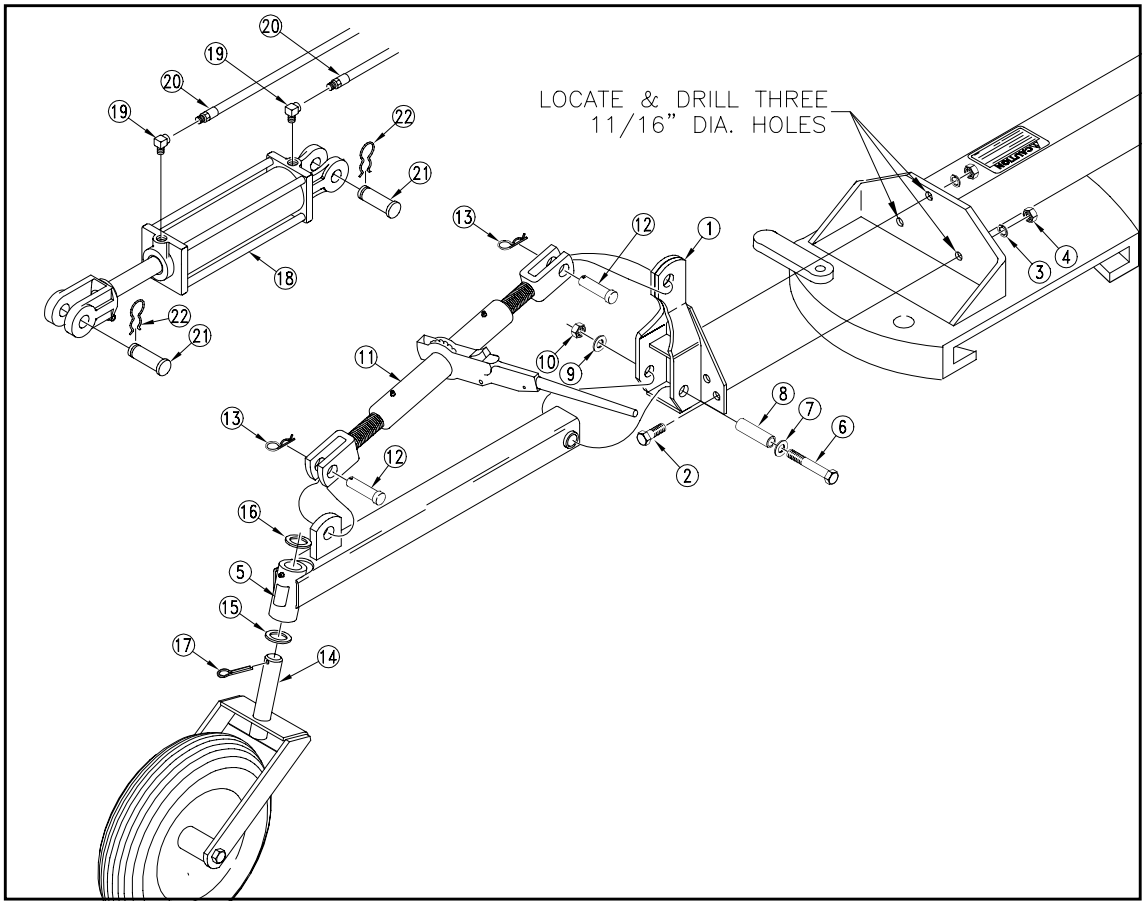

RB25 Series Single Gauge Wheel Installation
Figure 2-1

RB35 Series Gauge Wheel

Kit Bundles

300-014A . . . . . 25 & 35 BLADE & RAKE SINGLE GW
300-081A . . . . . HYDRAULIC BUNDLE W/ HOSES

Refer to Figure 2-2:

1. Remove retainer plate (#4) from blade frame.
2. Attach mounting bracket (#1) and retainer plate (#4) with three new 5/8"-11 x 1 1/2" GR5 hex head cap screws (#2) and lock washers (#3) as shown. Reuse existing hardware for lower bolt. Tighten bolts to correct torque.
3. Attach gauge wheel arm (#5) to mounting bracket (#1) with 5/8"-11 x 5" GR5 hex head cap screw (#6), flat washer (#7), 3 5/16" long tube (#8), flat washer (#9), and hex lock nut (#10). Tighten lock nut to correct torque.
4. Install 1 7/8" machine washer (#15) onto gauge wheel spindle (#14).
5. Insert gauge wheel spindle (#14) into gauge wheel arm (#5).
6. Secure gauge wheel with 1 7/8" machine washer (#16) and 1/4" cotter pin (#17). Bend one or both legs of cotter pin to prevent cotter pin from falling out.

Ratchet Jack Installation (standard)

1. Attach ratchet jack (#11) to mounting bracket (#1) and gauge wheel arm (#5) with clevis pins (#12). Secure pins with hair pin cotters (#13).

Hydraulic Cylinder Installation (Optional)

1. Position hydraulic cylinder (#18) with ports on top as shown. Thread 90 degree elbows (#19) into the two ports and tighten.
2. Screw 125" long hydraulic hoses (#20) to elbows (#19) and tighten.
3. Thread hydraulic couplings (couplings provided by customer) to other end of hydraulic hoses and tighten.

IMPORTANT: Attach cylinder base to the front mounting lug. The base will interfere with the gauge wheel arm if attached to the rear mounting lug.

4. Attach hydraulic cylinder to the lugs on the gauge wheel with two 1" clevis pins (#21). Make sure hydraulic ports are positioned on top and cylinder base is located to the front as shown.
5. Secure clevis pins with pin clips (#22).
6. Connect hoses to the tractor's hydraulic system.

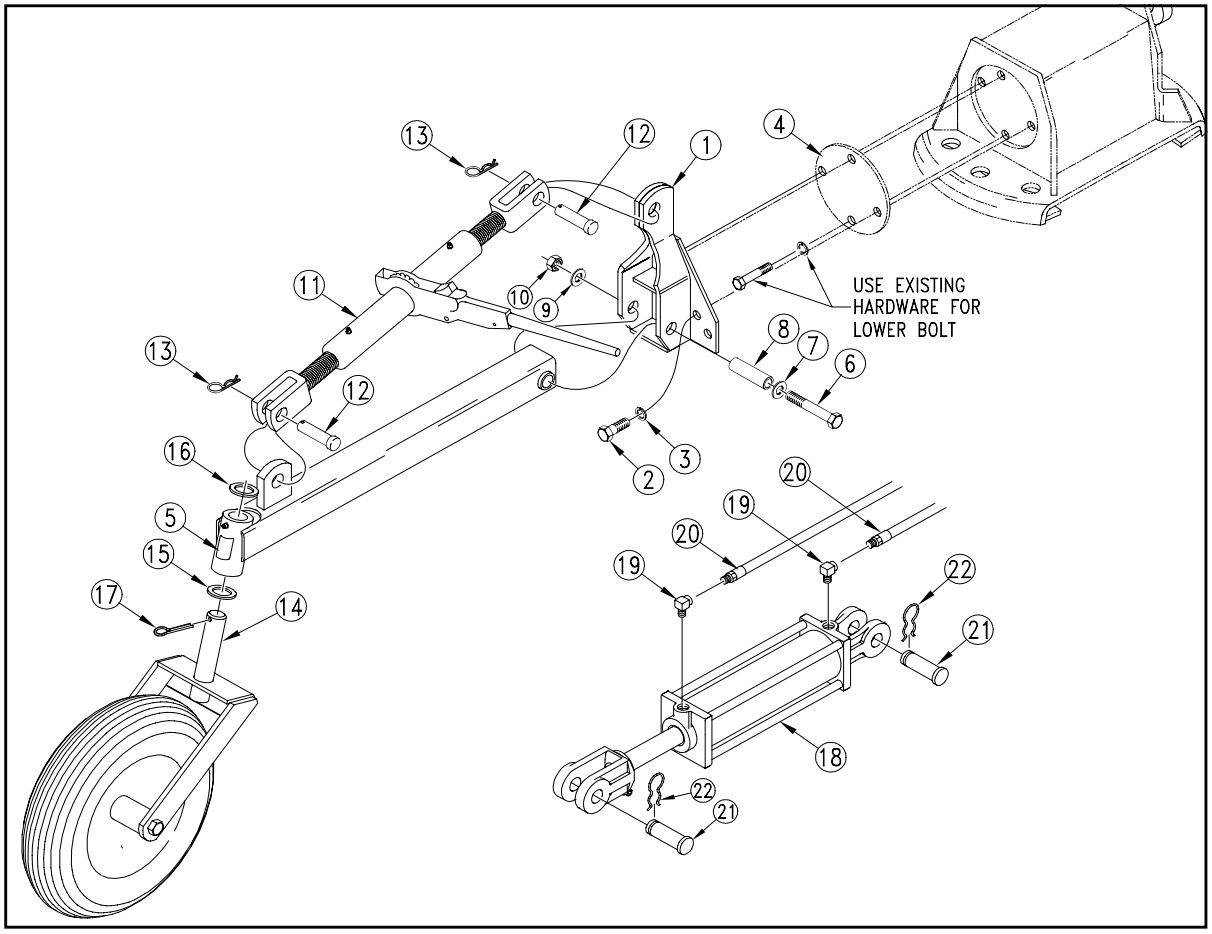

RB35 Series Single Gauge Wheel Installation
Figure 2-2

Skid Shoe

Kit Bundle (Pair of skid shoes)

301-330A. . . . . RB25 & 35 SKID SHOES

Refer to Figure 2-3:

See **"Torque Values Chart for Common Bolt Sizes"** on page 26.

1. Remove two 5/8"-11 x 1 3/4" GR5 plow bolts (#6) from the end of the blade. Keep hardware for installation of skid shoes.
2. Attach skid shoe bracket (#4) with existing 5/8"-11 x 1 3/4" GR5 plow bolts (#6) and hex flange lock nuts (#7). Tighten hardware to the correct torque.
3. Insert skid shoe (#1) into skid shoe bracket (#4). Make certain the edge with 5 dimples in the skid shoe slide bar are positioned to the back as shown.
4. Tighten the 1/2"-13 x 2" GR5 sq. head set screw (#2) against one of the dimples. Tighten hex nut (#3) against skid shoe bracket (#4).
5. Insert 1/4" x 1" cotter pin (#5) into the slide bar and secure by bending one or more legs to prevent the pin from backing out.
6. Repeat steps 1 through 3 for the other side.

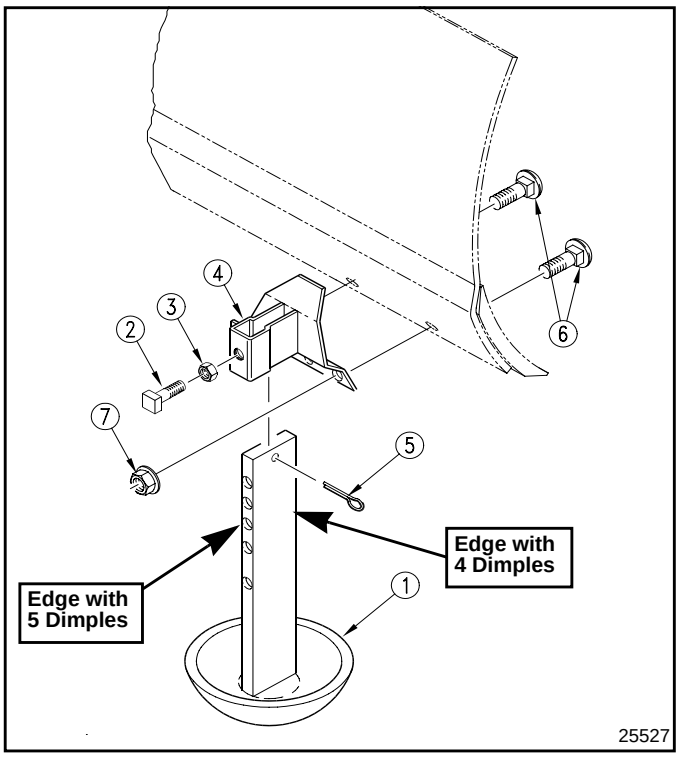

Skid Shoe Assembly
Figure 2-3

End Plates

Kit Bundle (Pair of End Plates)

301-010A. . . . . RB25 & 35 END PLATES

Refer to Figure 2-4:

See **"Torque Values Chart for Common Bolt Sizes"** on page 26.

1. Attach right hand end plate (#3) to the moldboard as shown with two 1/2"-13 x 1 1/2" GR5 hex head cap screws (#4), spring lock washer (#1), and hex nuts (#2). Tighten hardware to correct torque.
2. Repeat step 1 for the left hand end plate.

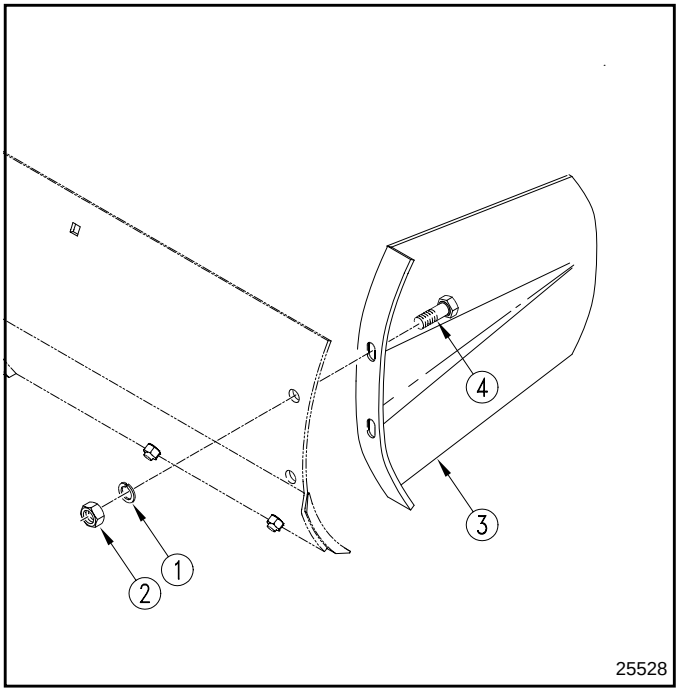

End Plate Assembly
Figure 2-4

Rake Frame

Kit Bundles

302-168A . . . . . 84" RAKE ATTACHMENT
302-169A . . . . . 96" RAKE ATTACHMENT

Refer to Figure 2-5:

DANGER

Always check installation of hex slotted nut and cotter pin securing blade to mainframe before moving blade. If either one is missing, the blade can fall from the mainframe causing serious bodily injury or death and break equipment.

1. Position Rear Blade assembly upside down on stable supports.
2. Remove lock pin (#8) and rotate blade until its turntable is 90 degrees to the frame turntable (#7).
3. With blade stable, remove cotter pin (#6), slotted hex nut (#5), and spindle washer (#4).
4. Raise blade off of frame (#7) and pivot bolt (#3).
5. Set blade aside.
6. Turn lower rake assembly (#1) upside down and rotate rake such that turntable (#2) is 90 degrees to the frame turntable (#7).
7. Position turntable (#2) above pivot bolt (#3) and carefully lower rake frame onto the pivot bolt.
8. Secure rake to the frame turntable with existing spindle washer (#2), slotted hex nut (#5), and cotter pin (#6).
9. Position assembled unit upright and rotate main frame to a forward position. Insert existing lock pin (#8) and secure with hair pin cotter (#9).

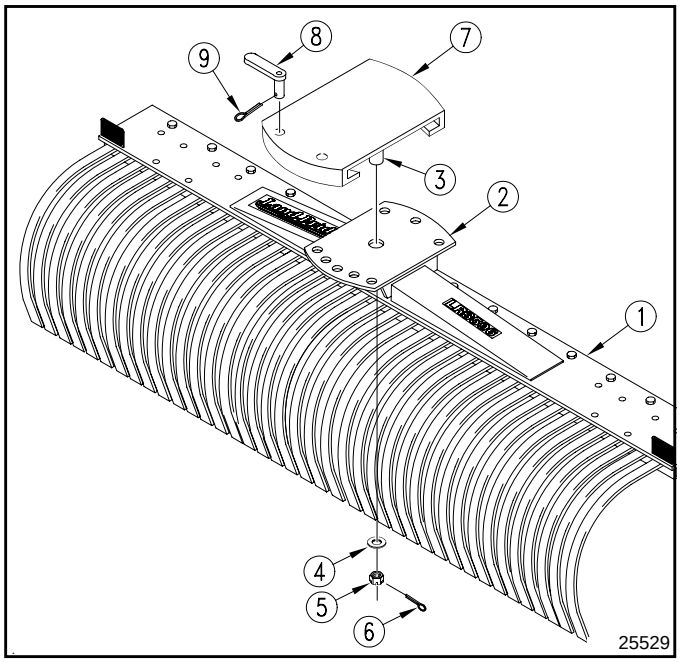

Rake Assembly
Figure 2-5

Offset Hydraulic Cylinder, 35 Series

Kit Bundle

300-081A. . . . . HYDRAULIC BUNDLE W/ HOSES

Refer to Figure 2-6:

Mount hydraulic cylinder on the left side to offset main frame to the right. Mount hydraulic cylinder on the right side to offset main frame to the left.

1. Position hydraulic cylinder (#3) with ports on top as shown. Thread 90 degree elbows (#4) into the two ports and tighten.
2. Screw 125" long hydraulic hoses (#5) into the elbows and tighten.
3. Thread hydraulic couplings (#6) (couplings provided by customer) to the other end of hydraulic hoses and tighten.

IMPORTANT: Attach cylinder base to mounting lug on hitch frame. The cylinder base will interfere with mainframe if attached to mainframe mounting lug.

4. Attach hydraulic cylinder to the cylinder mounting brackets with two 1" clevis pins (#1). Make sure hydraulic ports are positioned on top and cylinder base is located to the front as shown.
5. Secure clevis pins with hair pin cotters (#2).
6. Connect hoses to the tractor's hydraulic system.

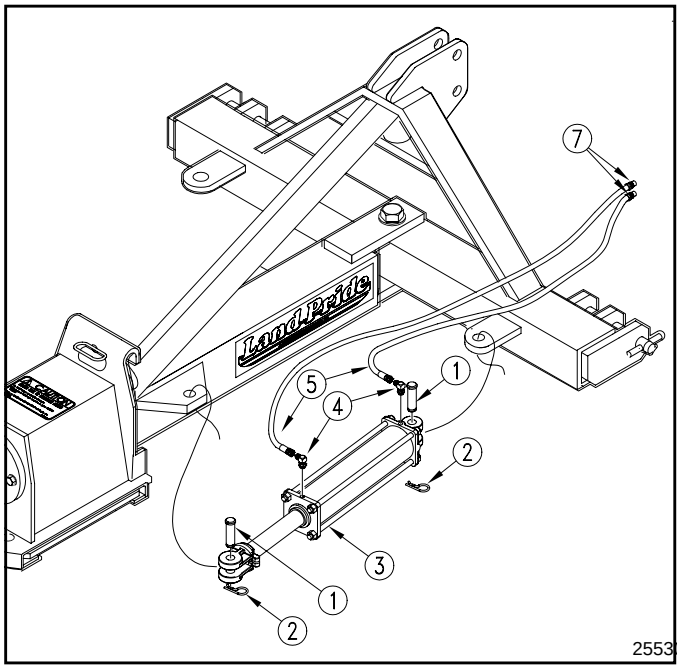

RB35 Hydraulic Cylinder Assembly
Figure 2-6

Blade Pitch

Blade pitch can be adjusted by lengthening or shortening the tractor's top center 3-point link. Increasing the blade pitch will increase the blades digging ability.

Lengthen the link to increase blade pitch when grading while traveling forward. Shorten the link to decrease blade pitch.

The opposite is true if backfilling. Shorten the link to increase blade pitch and lengthen the link to decrease blade pitch. To help protect the Rear Blade from damage while backfilling, lengthen the tractor's center top link until the blade will move across the top of the ground without forcing itself into the soil.

Blade Angling and Reversing

Refer to Figure 3-1 and Figure 3-2:

CAUTION

Avoid injury from falling blade. Always check to make sure all hardware is secured properly before rotating blade.

CAUTION

The blade may come in contact with the tractor's rear tire when offsetting it to its maximum position and angling it in the same direction to its most severe angle.

NOTE: Turn the Blade 180 degrees before using the blade in reverse direction.

Nine holes are provided for angling the blade in the forward position up to 60 degrees on each side of center in 15 degree increments. (Center position, 4 positions clockwise, and 4 positions counterclockwise.)

Five holes are provided for angling the blade in the reverse position up to 60 degrees on each side of center in 30 degree increments. (Center position, 2 positions clockwise, and 2 positions counterclockwise.)

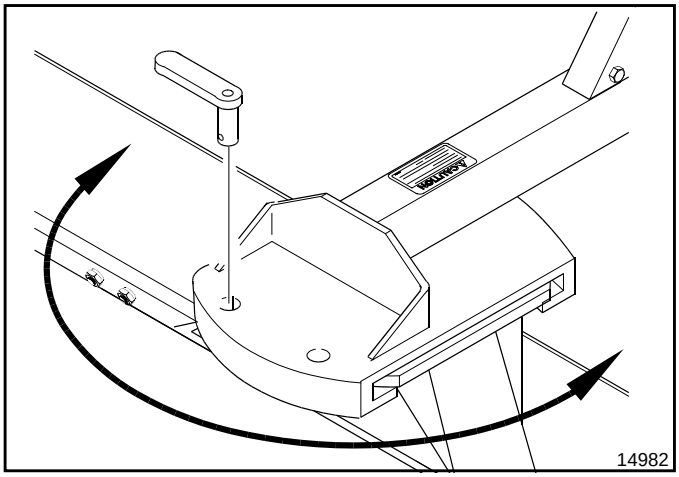

RB25 Blade Angling and Reversing
Figure 3-1

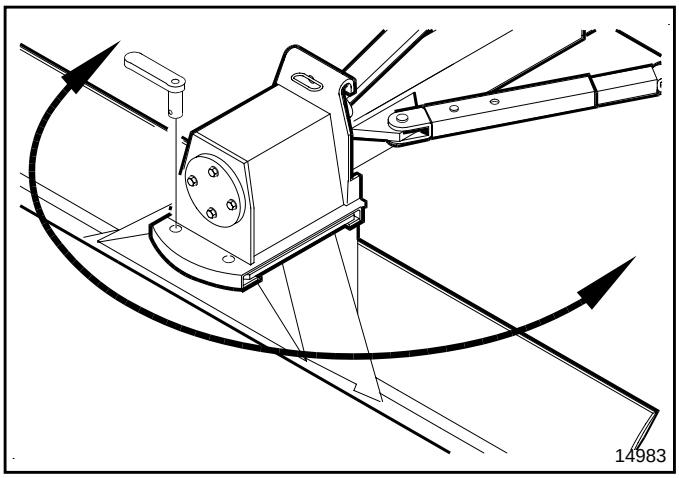

RB35 Blade Angling and Reversing
Figure 3-2

Blade Tilt

CAUTION

Avoid injury from falling blade. Always check to make sure all hardware is secured properly before rotating blade.

RB25 Blade Tilt

The blade will tilt so one end is lower than the other by adjusting one of the tractor's lower link arms up or down.

RB35 Blade Tilt

Refer to Refer to Figure 3-3:

The blade will tilt with five adjustments up to 30 degrees each way. (Center position, 2 positions clockwise, and 2 positions counterclockwise.) Remove yoke pin (#1) and tilt blade to desired angle. Replace pin and secure with hair pin cotter.

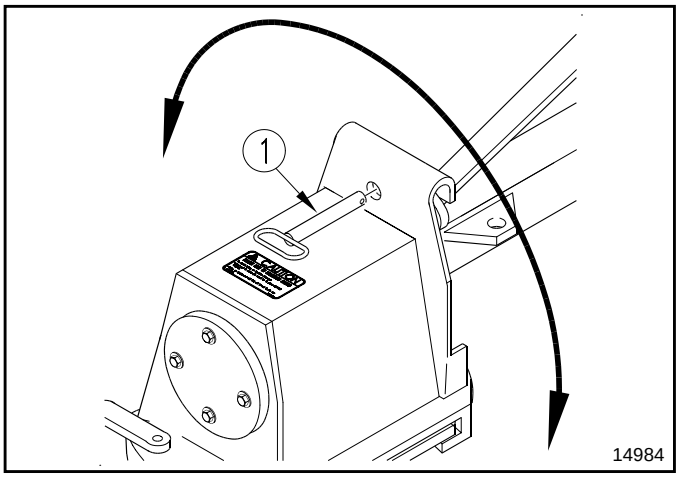

RB35 Blade Tilt
Figure 3-3

RB35 Frame Offset

Refer to Figure 3-4:

CAUTION

The blade may come in contact with the tractor's rear tire when offsetting it to its maximum position and angling it in the same direction to its most severe angle.

The frame will swing to the right or left 22" with seven adjustments up to 40 degrees. (Center position, 3 positions right, and 3 positions left.)

The mechanical linkage must be mounted on the left side when offsetting the main frame to the right. The mechanical linkage must be mounted on the right side when offsetting the main frame to the left.

Adjust linkage by pulling the center pin and swinging the frame to the desired angle. Lock linkage in place by inserting pin in the correct hole. Secure pin with hair pin cotter.

When using hydraulics, extend and retract hydraulic cylinder to control offsetting.

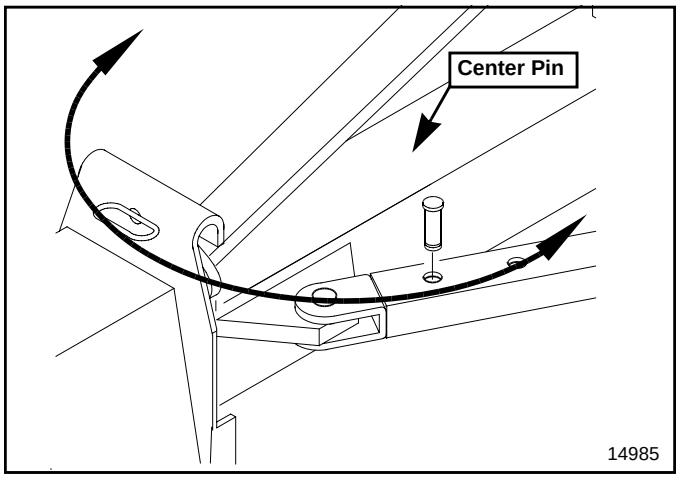

RB35 Blade Offset
Figure 3-4

Gauge Wheel

Refer to Figure 3-5:

IMPORTANT: The top center 3-Point link can be removed from blade and tractor before using gauge wheel accessory.

The gauge wheel provides accurate depth control when grading, leveling, or terracing. The height of the gauge wheel is determined by adjusting the ratchet jack or hydraulic cylinder.

Manual Gauge Wheel Adjustment

1. Set ratchet lock and pump lever back and forth to raise the gauge wheel.
2. Reposition ratchet lock and pump lever back and forth to lower gauge wheel.

Hydraulic Gauge Wheel Adjustment

1. If the gauge wheel cylinder is attached to the selector valve, make certain the valve lever is set to operate that cylinder.
2. Operate tractor control lever to change gauge wheel height up or down.

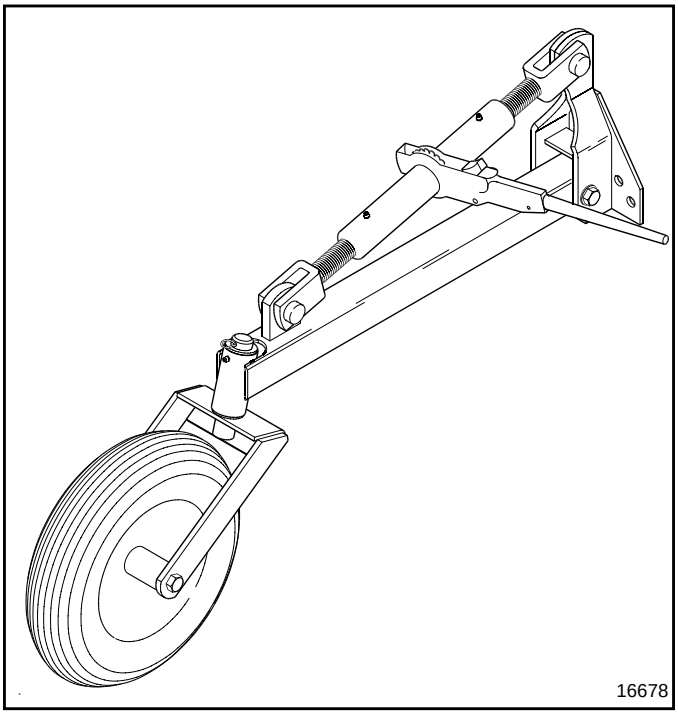

Gauge Wheel Adjustment
Figure 3-5

Skid Shoes

Refer to Figure 3-5:

The skid shoes protecting the blade from gouging into roadways when removing snow. They also prevent the blade from taking too deep a bite when lowering the blade into the soil.

1. Loosen jamb nuts (#2) and back off set screws (#3).
2. Slide skid shoes up or down an equal amount to the desired height and retighten set screws against one of the dimples on the edge of the slide bar.
3. Retighten jamb nuts to prevent set screws from working loose.

NOTE: Additional dimples are located on the side not shown in Figure 3-6. These dimples are positioned at a height in between the ones shown.

4. Turn skid shoes around for additional height settings.
   a. Removing cotter pins (#4).
   b. Remove skid shoes from mounting brackets.
   c. Turn skid shoe around and reinsert them into the mounting brackets.
   d. Replace cotter pins (#4) and bend one leg to keep cotter pin from falling out.

IMPORTANT: Always make sure skid shoes are positioned in brackets with equal number of dimpled holes on set screw side and adjusted to the same height. This keeps skid shoes adjusted equally.

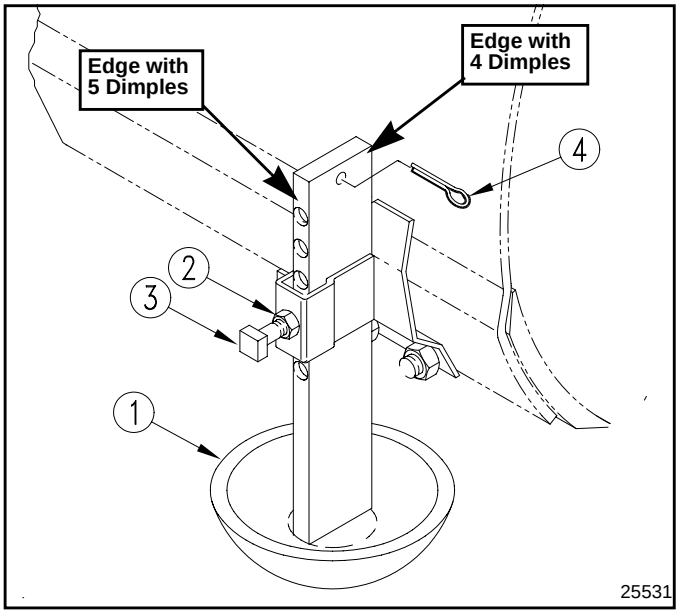

Skid Shoe Adjustment
Figure 3-6

Operating Checklist

Hazard control and accident prevention are dependent upon the awareness, concern, prudence, and proper training involved in the operation, transport, storage, and maintenance of the blade. Therefore, it is absolutely essential that no one operates the Rear Blade without first having read, fully understood, and become totally familiar with the Operator's Manual. Make sure the operator has paid particular attention to:

- **Important Safety Information**, pages 1 to 3
- **Section 1 Assembly & Set-Up,** page 10
- **Section 2: Set-Up of Accessories**, page 10
- **Section 4: Operating Instructions**, page 17
- **Section 3: Adjustments**, page 14
- **Section 5: Maintenance & Lubrication**, page 21

Operating Checklist

✔	Check	Reference
	Check 3-point hook-up procedure. Be sure all pins have been installed and are secured.	Page 9
	All blade adjustments have been made and pins have been installed and are secured.	page 14
	The operator has read and understood how to operate the blade.	Page 17
	Read and follow all Lubrication Instructions. Refer to the section on "Lubrication Points".	Page 22
	Check initially and periodically for loose bolts and pin connections. Make sure all hardware is tight and that worn or damaged hardware is replaced with properly rated hardware. Refer to the "Torque Values Chart for Common Bolt Sizes" for torque values.	Page 26
	Make sure all safety labels are in their proper location and in good readable condition.	Page 4
	Inspect tractor safety equipment to make sure it is in good working condition.	Tractor Manual

General Safety

DANGER

Always support underside of Rear Blade with solid blocking before working beneath unit. Never work under equipment supported by hydraulics. Hydraulics can drop equipment if controls are actuated or if hydraulic lines burst. Either situation can drop the Rear Blade instantly even when power to hydraulics is shut off.

DANGER

Do not allow anyone to operate this implement who has not been properly trained in its safe operation and do not let children operate the implement.

DANGER

Never carry a person on the Rear Blade. A person can fall and be ran over causing serious injury or death.

DANGER

Always check installation of hex slotted nut and cotter pin securing blade to mainframe before moving blade. If either one is missing, the blade can fall from the mainframe causing serious bodily injury or death and break equipment.

DANGER

Do not use blade tilt to raise tractor tires off the ground. Improper use of the Rear Blade can damaged the unit. Also, the hydraulic system can burst dropping the tractor causing serious injury or death.

DANGER

Always keep a safe distance from obstructions. The blade can extend beyond tractor tires and will make a wide swinging pattern when turning. Never hit a solid object with blade as this can damage property and cause tractor to pivot violently resulting in loss of control, serious injury, or death.

WARNING

Do not use Rear Blade for pulling objects out of the ground, lifting objects, carrying objects, pushing other equipment, or towing other equipment. Any of the above can result in Rear Blade damage, serious bodily injury or death.

WARNING

Operate blade only from a tractor equipped with a ROPS in the raised position or with a ROPS cab and with seat belt securely fastened.

CAUTION

Be certain you are not working over any underground wiring, pipes, or other obstructions. If there is any doubt, call your public service agency.

CAUTION

Never angle, tilt, or offset blade into tractor tires. This can damage blade and tractor tires.

CAUTION

Make sure hydraulic hoses are properly routed so that they will not become pinched or kinked while operating the tractor. A pinched or kinked hose can burst and leak hydraulic fluid.

CAUTION

Avoid catching hydraulic hoses on brush, post, stumps, and other protrusions that could damage and/or break them.

CAUTION

Do not operate hydraulic cylinders with blade in the ground. Improper use can damage the Rear Blade.

CAUTION

Always dress to stay warm in cold weather. Never allow body or extremities to become too cold. Go inside to warm-up before continuing when getting too cold.

IMPORTANT: Be careful when working areas where obstructions can be hidden. Always check the area before working it and mark any potential hazards with a visible flag. Travel slowly through high risk areas and always be prepared to stop immediately should the blade make contact with a solid object.

IMPORTANT: Do not Operate hydraulic cylinder(s) with blade under load. This can damage the moldboard, pivot pins and mainframe. Always remove load before operating hydraulics.

IMPORTANT: Do not hitch Rear Blade to a tractor rated outside the recommended horsepower range. Doing so can be bend and/or break the blade.

Inspection After Hook-Up

Make the following inspections after attaching the Rear Blade to the tractor:

1. Inspect tractor safety equipment to make sure it is in good working condition.
2. Carefully raise and lower the implement to ensure that the drawbar, tires, and other equipment on the tractor do not contact the frame and moldboard.
3. Carefully pivot blade fully clockwise and offset blade to align end of moldboard with tractor tire. Raise and lower implement to ensure tractor tire and tractor do not contact end of blade.
4. Carefully pivot blade fully counterclockwise and offset blade to align end of moldboard with tractor tire. Raise and lower implement to ensure tractor tire and tractor do not contact end of blade.
5. Inspect Hydraulic hoses for wear, damage, and hydraulic leaks. See **"Avoid High Pressure Fluids Hazard"** on page 3. Replace damaged and worn hoses with genuine Land Pride parts.

Transporting

DANGER

When traveling on public roads at night or during the day, use accessory lights and devices for adequate warning to operators of other vehicles. Comply with all federal, state, and local laws.

DANGER

Make sure the Rear Blade does not block the tractor's Slow Moving Vehicle (SMV) sign while transporting on a road. Install a SMV sign on the Rear Blade if tractor's SMV sign is blocked. Traffic not alerted to a slow moving tractor might hit the tractor causing serious injury or death.

DANGER

Transport with Rear Blade centered behind the tractor. An offset blade extends past the tractor farther and carries a higher risk of hitting traffic and other obstructions that can cause serious injury or death.

DANGER

Always keep a safe distance from obstructions. The blade can extend beyond tractor tires and will make a wide swinging pattern when turning. Never hit a solid object with blade as this can damage property and cause tractor to pivot violently resulting in loss of control, serious injury, or death.

1. Do not operate a tractor that has weak brakes or worn tires.
2. Select a safe ground speed when transporting from one area to another.
3. Shift to a lower gear when traveling over rough or hilly terrain and when going downhill.
4. Leave enough clearance on both sides of Rear Blade when traveling. Reduce ground speed when turning and leave enough clearance so the blade does not contact obstacles such as buildings, trees, or fences.
5. When traveling on roadways:
   - Transport with blade centered behind the tractor to minimize blade overhang.
   - Transport with blade facing forward so that the red decals face back and amber decal face front.
   - Transport in such a way that faster moving vehicles may pass you safely.
   - Slow down if traveling on a wet slick road.

Rear Blade Functions

IMPORTANT: Do not Operate hydraulic cylinder(s) with blade under load. This can damage the moldboard, pivot pins and mainframe. Always remove load before operating hydraulics.

IMPORTANT: The warranty shall not apply to damage caused by misuse, abuse, or contact with obstructions.

Grading

Pivot moldboard to the desired angle, lower blade to the ground, and set the tractor's draft-link height control to the desired position. Proceed forward at a speed of no more than 2 to 4 mph. The blade should immediately begin shaving the surface. A blade full of material can be raised slightly so that the material can flow out evenly under the blade to effectively shave off high spots and fill in potholes or depressions. Loose soil can be smoothed out by pushing the soil with the back of the moldboard while backing-up.

If a gauge wheel is included, set tractor's draft-link height control to the maximum preferred cutting depth. Raise and lower blade with the gauge wheel.

Edge work

Material that is close to fences, buildings and other obstructions can be graded by offsetting the moldboard to the right or left beyond the tractor tire. Always make certain the end of the blade is offset far enough to be visible to the operator. Always keep a safe distance away from obstructions, drive slowly when passing by them, and stay clear of them when turning. Always be aware that the blade will make a wide swinging pattern in a turn and always be ready to stop immediately to keep from hitting an obstruction. Never hit an obstruction as this can damage the blade and/or obstruction.

Backfilling

Backfilling is a process where the operator turns the blade around 180° and pushes the product while backing-up. Be careful not to overstress the Rear Blade while backfilling as load forces on the blade and frame increase when backing up. To help protect the Rear Blade from damage, lengthen the tractor's center top link until the blade will move across the top of the ground without forcing itself into the soil, adjust the offset to be straight behind the tractor and set the blade angle at 90° (perpendicular to the Mainframe). Keep the load in the center of the blade and not on the end of the blade. Don't ram a load with the blade and always operate at slow speeds when backing-up. Be ready to stop immediately if a solid object is hit. Removing snow while backing-up is especially dangerous as snow can hide solid objects and there is a tendency to drive too fast to get the snow removal job done. High speeds multiply the forces exerted on the Rear Blade.

Ditch Work

Fill ditches by offsetting the blade beyond the tractor wheel to keep the tractor out of the ditch. Angle the blade to move the dirt toward and into the ditch while traveling forward. Set blade depth as needed (see **"Grading"** instructions on this page when setting blade depth).

Un-Hooking the Rear Blade

Un-hook Rear Blade from the tractor as follows:

1. Park on a level solid hard surface. Place tractor gear selector in park and set park brake.

CAUTION

Make certain parking stand is properly pinned with wire retaining pin. If not pinned properly, the Rear Blade can fall causing serious injury.

2. Lower parking jack and secure with hitch pin.
3. Lower blade and parking jack onto level ground or onto blocks supporting the unit just above ground.
4. Shut tractor engine off and remove key.
5. If coupled to hydraulic cylinder(s), move hydraulic control lever(s) back and forth several times to reliever hydraulic pressure at the couplings and then unhook couplings from the tractor and store on the Rear Blade frame to keep couplings up out of the dirt.
6. If needed, adjust length of upper center 3-point link until hitch pin can be removed from hitch frame.
7. Remove hitch pins from lower 3-point arms at the hitch frame.
8. Reinstall hitch pins, linch pins, and hairpin cotters in the Rear Blade hitch frame for storage.
9. Refer to **"Storage"** instructions on page 21 when storing the Rear Blade for a long time.

Basic Operating Instructions

1. Thoroughly inspect the work area for buried utility cables, pipelines, sprinkler heads, and any unforeseen objects. Mark any potential hazards.
2. Place grade stakes if you intend to develop a specific grade or soil level.
3. Adjust blade to the desired angle, tilt, and offset position before lowering blade to the ground.
4. Lower blade to the ground and proceed forward at a speed of no more than 2 to 4 mph. The blade should immediately begin shaving the soil surface.
5. Set tractor's draft-link height control lever to the desired grade position. If blade is set at a 90 degree angle to the direction of travel, it may be necessary to raise the blade slightly so that dirt and gravel can flow out evenly under the blade as it shaves off high spots and fills in potholes or depressions.

General Operating Instructions

Once you have familiarized yourself with the Operator's Manual, completed the operations checklist, and properly attached your Land Pride blade to your tractor, you are now almost ready to begin work. The RB25 and RB35 Series blades were designed and built by Land Pride for category I and II 3-Point hitch and Quick Hitch attachment for 25 to 60 hp tractors with the RB25 Series and 35 to 80 hp tractors with the RB35 Series. They are ideal for snow removal as well as dirt leveling, finish grading, and backfilling applications at feedlots, outdoor arenas, building and construction sites, and maintenance operations on farm and ranch lanes or roadways. They are also excellent for soil contouring and construction and maintenance of ditches and waterways.

Hopefully you have checked out your work site for any buried utility cables, pipelines, sprinkler heads, or other obstacles that you wouldn't want to damage or encounter. Grade stakes should now be in place if you intend to develop a specific grade, elevation, soil contour, or roadbed crown. The blade's primary purpose is for grading or leveling of soil, gravel, or aggregate in the warmer months or snow removal in the colder months. These functions are best done at an approximate 2 to 4 mph ground speed. Becoming proficient with a blade takes practice.

Tractor horsepower, your personal skill level, soil or aggregate composition, moisture levels, and compaction factors will all have a definite impact on how easily and effectively you get the job done when you are in the dirt working mode. Develop a plan to achieve your expected results. Set the blade up at the proper angle or angles to do the job. Adjust the blade angle by simply pulling a pin and rotating the blade to the desired angle and reinserting the pin. Setting the blade up may require some experimentation to achieve the desired results. Lower the blade to the ground and proceed forward at a speed of no more than 2 to 4 mph. The blade should immediately begin shaving the soil surface and dirt or aggregate material. Set the tractor's draft-link height control in the desired position. With the blade set at a 90 degree angle you may need to raise the blade slightly so that the dirt or gravel can flow out evenly under the blade effectively shaving off high spots and filling in potholes or depressions.

If you have the blade set at a horizontal angle, the shaved or accumulated material will begin to move outward toward the trailing edge of the blade. The greater the angle the more quickly the shaved material will be distributed off to the side. If it is necessary to work up next to a building foundation, abutment, or raised curb you may want to offset the RB35 series blade (Not available on the RB25 series) so that the outside edge of the blade is beyond the outer edge of the tractor tire in working position. Back-filling operations may be more easily performed by reversing the blade and operating the tractor in reverse or commonly called the push mode. Be careful not to overstress the rear blade while backfilling as load forces on the blade and frame increase while backing up.

If you are performing the construction of soil contours or waterways you will probably need to set a tilt angle on the blade to achieve the desired effect. If you are grading or cutting a new ditch bank or forming a road crown, you will probably want to offset the blade in combination with setting an appropriate tilt angle. This again will likely require some experimentation to gain desired results. Snow removal techniques with a blade will be very similar to dirt working techniques and will require a little experimentation to become proficient.

With a little practice you should become a very good operator and consistently achieve the desired results you expect with your Land Pride RB25 and RB35 Series blade.

See **"Specifications & Capacities"** on page 23 and **"Features & Benefits"** on page 24 for additional information and performance enhancing options.

Maintenance

Proper servicing and adjustment is the key to the long life of any implement. With careful inspection and routine maintenance, you can avoid costly downtime and repair.

Check all bolts after using the unit for several hours to be sure they are tight. Replace any worn, damaged, or illegible safety labels by obtaining new labels from your Land Pride Dealer.

The parts on your Rear Blade have been specially designed and should only be replaced with genuine Land Pride parts. Do not alter the blade in a way which will adversely affects its performance.

DANGER

Hydraulic fluid under pressure can penetrate skin. Wear protective gloves and safety glasses or goggles when working with hydraulic systems. Use a piece of cardboard or wood rather than hands when searching for hydraulic leaks. If hydraulic fluid is injected into the skin, it must be treated by a doctor within a few hours or gangrene may result.

DANGER

Always secure Rear Blade in the up position with solid supports before servicing under the unit. Never work under equipment supported by hydraulics. Hydraulics can drop equipment if controls are actuated or if hydraulic lines burst. Either situation can drop the Rear Blade instantly even when power to the hydraulics is shut off.

DANGER

Always check installation of hex slotted nut and cotter pin securing blade to mainframe before moving blade. If either one is missing, the blade can fall from the mainframe causing serious bodily injury or death and break equipment.

WARNING

Do not alter the Rear Blade. Altering the blade can adversely affect its performance and reliability causing damage to the blade, tractor and/or bodily injury. Always replace damaged parts with original Land Pride parts.

CAUTION

Replace worn, damaged, or missing parts with genuine Land Pride Parts. Replacing parts with other brands can cause the equipment to not perform properly and may lead to breakage that can cause bodily injury.

Storage

Clean, inspect, service, and make necessary repairs to the Rear Blade when parking it for long periods and when parking it at the end of a working season. This will help ensure that the blade is ready for field use the next time you hook-up to it.

DANGER

Always secure Rear Blade in the up position with solid supports before servicing under the unit. Never work under equipment supported by hydraulics. Hydraulics can drop equipment if controls are actuated or if hydraulic lines burst. Either situation can drop the Rear Blade instantly even when power to the hydraulics is shut off.

1. Clean off any dirt and grease that may have accumulated on the Rear Blade and then wash surfaces thoroughly with a garden hose.
2. Inspect for loose, damaged, or worn parts and hardware. Adjust or replace parts as needed with genuine Land Pride Parts.
3. Repaint parts where paint is worn or scratched to prevent rust. Ask your dealer for Aerosol Land Pride touch-up paint. Paint is also available in touch-up bottles with brush, quarts, and gallon sizes by adding TU, QT, or GL to the end of the Aerosol part number.

Land Pride Aerosol Touch-up Paint

Part No.	Part Description
821-011C	PAINT LP BEIGE AEROSOL SPRAY CAN
821-002C	PAINT LP BLACK AEROSOL SPRAY CAN
821-058C	PAINT GREEN AEROSOL SPRAY CAN
821-066C	PAINT ORANGE AEROSOL SPRAY CAN

4. Replace all damaged or missing decals.
5. Lubricate as noted in **"Lubrication Points"** starting on page 22.
6. A coating of oil or grease may be applied to the moldboard and blade to minimize oxidation.
7. Store Rear Blade on a level surface in a clean, dry place. Inside storage will reduce maintenance and increase the life of the unit.
8. Follow all unhooking instructions on page 19 when disconnecting tractor from the Rear Blade.

Lubrication Points

Lubrication Legend	Multi-purpose spray lube	Multi-purpose grease lube	Multi-purpose oil lube	50 hrs	Intervals in hours at which lubrication is required

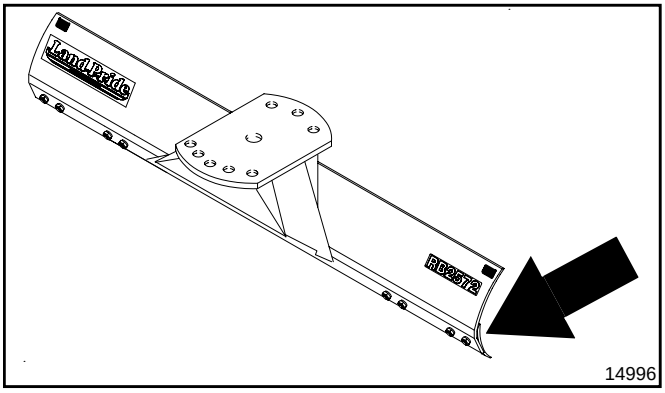

Seasonally

Moldboard and Blade

Grease moldboard and blade when storing for an extended period of time.

Type of Lubrication: Multi-Purpose

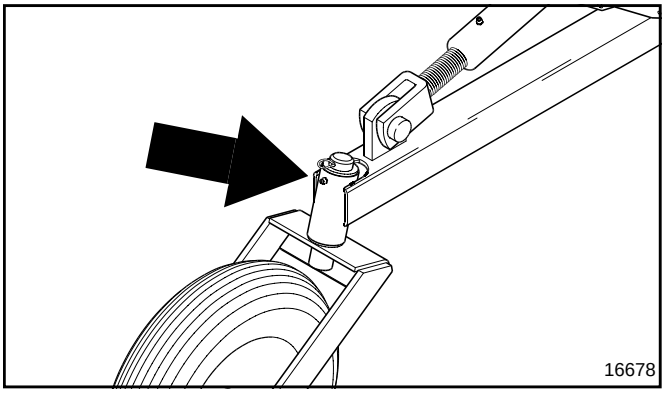

As Required

Gauge Wheel Caster

Lubricate daily when the blade is in use and before storing.

Type of Lubrication: Multi-Purpose

Quantity = 2-4 pumps

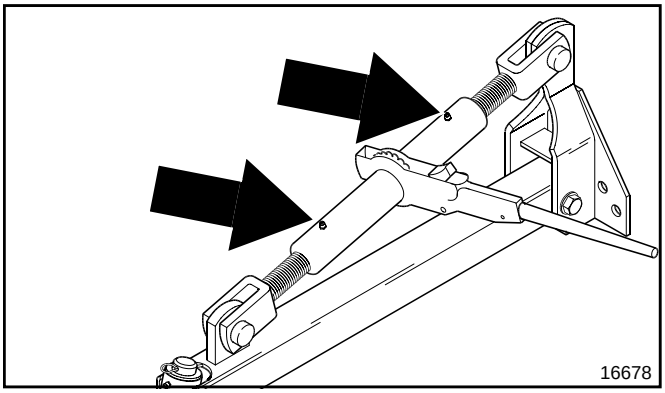

As Required

Gauge Wheel Ratchet Jack

Type of Lubrication: Multi-Purpose

Quantity = 2-4 pumps

Quantity = Coat Generously

RB25 &RB35 Series Rear Blades						
	RB2572	**RB2584**	**RB2596**	**RB3572**	**RB3584**	**RB3596**
Blade Width	72"	84"	96"	72"	84"	96"
Approximate Weight (lbs.)	369 lbs.	396 lbs.	425 lbs.	484 lbs.	533 lbs.	566 lbs.
Horsepower Rating	25-60 HP			35-80 HP		
Hitch Type	Cat. 1 Fits Land Pride Quick Hitch			Cat. 1 & 2 Fits Land Pride Quick Hitch		
Blade Angle	9 Forward up to 60 degrees clockwise & counterclockwise 5 Reverse up to 60 degrees clockwise & counterclockwise					
Blade Offset	No			Up to 22" left or right (7 positions: Center, 3 left, and 3 right)		
Blade Tilt	Limited to tractor's lower 3-point arm adjustment			5 Positions (Maximum 30° up and 30° down in 15° increments)		
Moldboard Height	17 1/2"					
Moldboard Thickness	5/16"					
Cutting Edge	1/2" x 6" Heat treated Replaceable & Reversible (Double bevel)					
Parking Stand	Retractable					
Accessories	Single Gauge Wheel, Skid Shoes, End Plates Hydraulic Cylinder For Single Gauge Wheel and Landscape Rake Adaptable			Single Gauge Wheel, Skid Shoes End Plates Hydraulic Cylinder For Single Gauge Wheel, Hydraulic Cylinder For Frame Offset and Landscape Rake Adaptable		

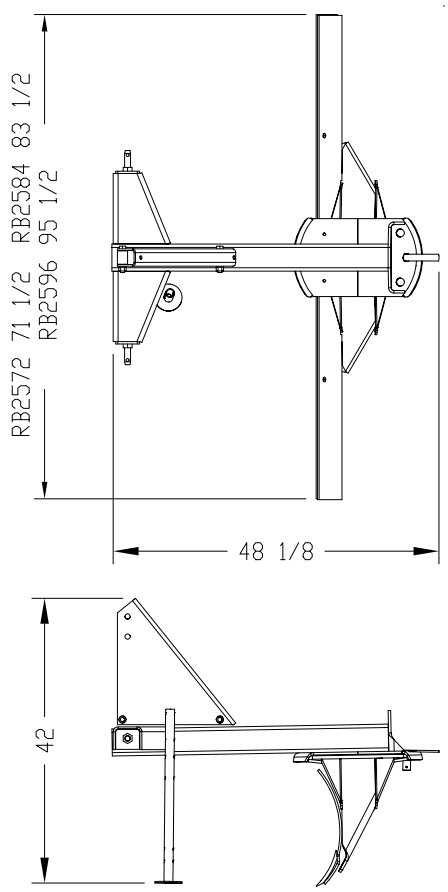

RB25 Series

27553

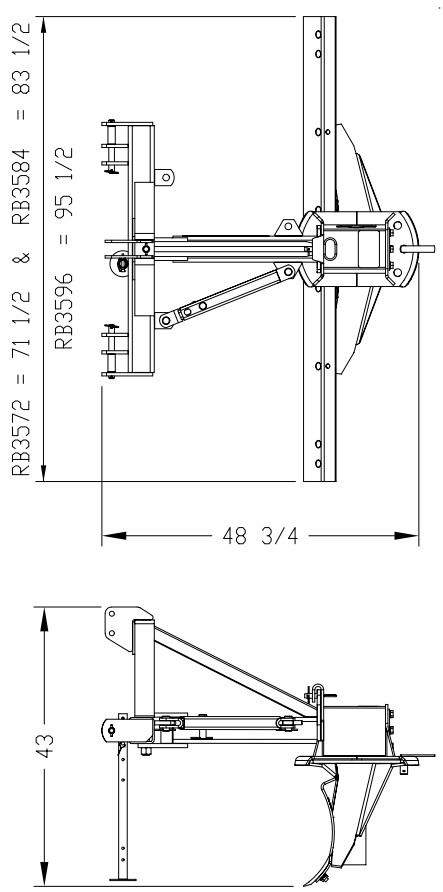

RB35 Series

26807

RB25 Series Rear Blades

Features	Benefits
Warranty	One year parts & labor. See warranty page for complete details.
72", 84", 96" Working widths	Choice of three sizes to pick from.
25-60 HP range	Fits a wide variety of small tractors between 25 & 60 HP.
Fits Land Pride Quick-Hitch	Allows for quick and easy one person hook-up.
Blade angles left and right up to 60° in either direction	(9 Forward positions in 15° increments and 5 reverse positions in 30° increments) Many angles for diverse jobs and results.
17 1/2" High rolled moldboard	Rolls the material for less drag.
5/16" Moldboard thickness	Offers thickness for rugged work.
1/2" x 6" Heat-treated reversible cutting edge	Gives twice the life from the cutting edge by being able to reverse it.
Retractable Parking Stand	Keeps the frame off the ground and makes hook-up easier.
Landscape Rake adaptable	Remove moldboard and add rake element to add diversity of frame.
Skid shoes (optional)	Set depth of blade to clear obstructions like manhole covers, street cracks.
End plates (optional)	End plates allow blade to hold in material to move.
Gauge wheel (optional)	Set depth of blade to do level grading.

RB35 Series Rear Blades

Features	Benefits
Warranty	One year parts & labor.
72", 84", 96" Working widths	Choice of three sizes to pick from.
35-80 HP rating	Fits a wide variety of small tractors between 35 & 80 HP.
Cat. 1 & 2 Hitch	Fits wide variety of tractors.
Fits Land Pride Quick-Hitch	Allows for quick and easy one person hook-up.
Blade angles left and right up to 60° in either direction	(9 Forward positions in 15° increments and 5 reverse positions in 30° increments) Many angles for diverse jobs and results.
Blade offsets left or right 12"	(7 positions: Center, 3 left and 3 right) Helps extend blade past tractor tire.
Blade tilts up and down up to 30°	(5 positions: Center, 2 clockwise, and 2 counterclockwise) Allows operator to do simple tasks such as putting a crown in the middle of a road to making V-type ditches.
Heavy turntable housing (dog house)	Keeps all parts fitting snug to eliminate premature wear. Extends life on threaded shaft.
17 1/2" High rolled moldboard	Rolls material for less drag.
5/16" Moldboard thickness	Offers thickness for rugged work.
2" x 2 x 3/8" Angle iron reinforcement on 84" & 96" Moldboards	Gives 84" & 96" moldboard added strength.
1/2" x 6" Heat-treated reversible cutting edge	Gives twice the life from the cutting edge by being able to reverse it.
Retractable Parking Stand	Keeps frame off ground during storage, also allows for easy hook-up.
Landscape Rake adaptable	Landscape Rake can be added.
End plates (optional)	End plates allow the blade to hold dirt in to move it.
Skid shoes (optional)	Set depth of blade to clear obstructions such as manhole covers or street cracks.
Gauge wheel (optional)	Can be used for more precise grading by keeping the moldboard at a fixed position.

Troubleshooting Chart

Problem	Cause	Solution
Bent Hitch Frame and/or Mainframe While Backfilling	Hitting one or more solid objects.	Check for solid objects before backfilling. Drive slow when in unknown conditions & stop immediately at first sign of trouble.
	Blade is digging too deep into the ground.	Lengthen top center 3-point link until blade quits digging in the ground.
	Mainframe is offset.	Align Mainframe so that it is straight.
	Load on moldboard is not centered.	Keep load in the center of the moldboard.
Bent Hitch Frame, Mainframe and/or Moldboard While Making a Turn	Swinging the Rear Blade into a solid object while making a turn.	Stay clear of solid objects while turning. Remember the back will make a wide swinging pattern when turning.
Bent Moldboard	The Moldboard could have a slight curve that developed during factory weld-up.	No solution required. Slight curve is acceptable and does not affect operation.
	Hitting one or more solid objects that are hidden or not hidden in the ground.	Check for solid objects before operating. Drive slow when in unknown conditions & stop immediately at first sign of trouble.
	Hitting a solid object with the end of the moldboard.	Keep moldboard ends a safe distance away from solid objects. Manually remove the last several inches of product away.
	RB35 Only: Operating the offset hydraulic cylinder with moldboard loaded or resting on the ground.	Make sure moldboard is empty of product and raised off the ground before activating the hydraulic cylinder.
Blade Does Not Penetrate Soil	Ground is too hard.	Loosen soil with a Land Pride Scarifier. Apply water to the surface or wait for a rain.
	Blade cutting edge is too dull.	Replace blade to get a new cutting edge.
	Blade pitch is set too light.	Lengthen top center 3-point link.
Blade Penetrates Soil Too Deep When Traveling Forward.	Ground is too soft	Install Single Gauge Wheel. Install Skid Shoes.
	Blade pitch is set too excessive.	Shorten top center 3-point link when traveling forward.
Grading Is Not Level	Tractor and blade follow ground contour.	Install Single Gauge Wheel.
	Tractor's draft-link height control is lifting the blade.	Set draft-link height control to the proper cutting depth.
Hydraulic Oil Is Leaking	Hydraulic Connection is not tight.	Tighten connection.
	Connection is cracked from overtightening.	Replaced cracked connection.
	Connection threads have been mismatched.	Use connectors with matched threads.
	Sealant not applied to connection when required.	Break connection apart, apply sealant and reattach connection.
	Hose is damaged from being worn or pinched.	Replace damaged hose. Make sure hose does not become pinched during operation.
	Hose couplings are worn or damaged.	Replace hose couplings.
Hydraulic Cylinder Does Not Operate	Quick coupler(s) not properly connected.	Reconnect quick connect coupler(s).
	Low on hydraulic oil.	Add oil the tractor's hydraulics.
	Hydraulic hose is pinched.	Remove hose from pinched area.
	Hydraulic plumbing not correct.	Retrace hydraulic plumbing and make necessary corrections.
Moldboard Falls From the Mainframe	Kingpin and/or Moldboard pivot pin retaining bolts are missing.	Check Kingpin & Moldboard pivot pin bolts daily. Make sure they are properly torqued. Apply loctite if they keep coming loose. Replace missing bolts.

Torque Values Chart for Common Bolt Sizes

Bolt Size (Inches)	Bolt Head Identification: Grade 2		Grade 5		Grade 8	
in-tpi [1]	N · m [2]	ft-lb [3]	N · m	ft-lb	N · m	ft-lb
1/4" - 20	7.4	5.6	11	8	16	12
1/4" - 28	8.5	6	13	10	18	14
5/16" - 18	15	11	24	17	33	25
5/16" - 24	17	13	26	19	37	27
3/8" - 16	27	20	42	31	59	44
3/8" - 24	31	22	47	35	67	49
7/16" - 14	43	32	67	49	95	70
7/16" - 20	49	36	75	55	105	78
1/2" - 13	66	49	105	76	145	105
1/2" - 20	75	55	115	85	165	120
9/16" - 12	95	70	150	110	210	155
9/16" - 18	105	79	165	120	235	170
5/8" - 11	130	97	205	150	285	210
5/8" - 18	150	110	230	170	325	240
3/4" - 10	235	170	360	265	510	375
3/4" - 16	260	190	405	295	570	420
7/8" - 9	225	165	585	430	820	605
7/8" - 14	250	185	640	475	905	670
1" - 8	340	250	875	645	1230	910
1" - 12	370	275	955	705	1350	995
1-1/8" - 7	480	355	1080	795	1750	1290
1 1/8" - 12	540	395	1210	890	1960	1440
1 1/4" - 7	680	500	1520	1120	2460	1820
1 1/4" - 12	750	555	1680	1240	2730	2010
1 3/8" - 6	890	655	1990	1470	3230	2380
1 3/8" - 12	1010	745	2270	1670	3680	2710
1 1/2" - 6	1180	870	2640	1950	4290	3160
1 1/2" - 12	1330	980	2970	2190	4820	3560

Bolt Size (Metric)	Bolt Head Identification: Class 5.8		Class 8.8		Class 10.9	
mm x pitch [4]	N · m	ft-lb	N · m	ft-lb	N · m	ft-lb
M 5 X 0.8	4	3	6	5	9	7
M 6 X 1	7	5	11	8	15	11
M 8 X 1.25	17	12	26	19	36	27
M 8 X 1	18	13	28	21	39	29
M10 X 1.5	33	24	52	39	72	53
M10 X 0.75	39	29	61	45	85	62
M12 X 1.75	58	42	91	67	125	93
M12 X 1.5	60	44	95	70	130	97
M12 X 1	90	66	105	77	145	105
M14 X 2	92	68	145	105	200	150
M14 X 1.5	99	73	155	115	l215	160
M16 X 2	145	105	225	165	315	230
M16 X 1.5	155	115	240	180	335	245
M18 X 2.5	195	145	310	230	405	300
M18 X 1.5	220	165	350	260	485	355
M20 X 2.5	280	205	440	325	610	450
M20 X 1.5	310	230	650	480	900	665
M24 X 3	480	355	760	560	1050	780
M24 X 2	525	390	830	610	1150	845
M30 X 3.5	960	705	1510	1120	2100	1550
M30 X 2	1060	785	1680	1240	2320	1710
M36 X 3.5	1730	1270	2650	1950	3660	2700
M36 X 2	1880	1380	2960	2190	4100	3220

[1] in-tpi = nominal thread diameter in inches-threads per inch

[2] N· m = newton-meters

[3] ft-lb= foot pounds

[4] mm x pitch = nominal thread diameter in millimeters x thread pitch

Torque tolerance + 0%, -15% of torquing values. Unless otherwise specified use torque values listed above.

Warranty

Land Pride warrants to the original purchaser that this Land Pride product will be free from defects in material and workmanship beginning on the date of purchase by the end user according to the following schedule when used as intended and under normal service and conditions for personal use.

Overall Unit: One year Parts and Labor

Hydraulic Cylinder: One year Parts and Labor.
Hoses and seals are considered wear items.

Cutting Edges: Considered wear items

This Warranty is limited to the replacement of any defective part by Land Pride and the installation by the dealer of any such replacement part, and does not cover common wear items. Land Pride reserves the right to inspect any equipment or parts which are claimed to have been defective in material or workmanship.

This Warranty does not apply to any part or product which in Land Pride's judgment shall have been misused or damaged by accident or lack of normal maintenance or care, or which has been repaired or altered in a way which adversely affects its performance or reliability, or which has been used for a purpose for which the product is not designed. Misuse also specifically includes failure to properly maintain oil levels, grease points, and driveline shafts.

Claims under this Warranty should be made to the dealer which originally sold the product and all warranty adjustments must be made through an authorized Land Pride dealer. Land Pride reserves the right to make changes in materials or design of the product at any time without notice.

This Warranty shall not be interpreted to render Land Pride liable for damages of any kind, direct, consequential, or contingent to property. Furthermore, Land Pride shall not be liable for damages resulting from any cause beyond its reasonable control. This Warranty does not extend to loss of crops, any expense or loss for labor, supplies, rental machinery or for any other reason.

No other warranty of any kind whatsoever, express or implied, is made with respect to this sale; and all implied warranties of merchantability and fitness for a particular purpose which exceed the obligations set forth in this written warranty are hereby disclaimed and excluded from this sale.

This Warranty is not valid unless registered with Land Pride within 30 days from the date of purchase by the end user.

Model Number _____ **Serial Number** _____

Corporate Office: P.O. Box 5060
Salina, Kansas 67402-5060 USA
www.landpride.com